TOWN OF VIENNA
DEPARTMENT OF PUBLIC WORKS
FAIRFAX COUNTY, VIRGINIA

GLYNDON STREET, N.E.
ROADWAY AND DRAINAGE IMPROVEMENT PLAN
100% DESIGN CONSTRUCTION DRAWINGS

GENERAL NOTES

OWNER/ DEVELOPER:
TOWN OF VIENNA
DEPARTMENT OF PUBLIC WORKS
127 CENTER STREET, SOUTH
VIENNA, VA 22180

1. THE EXISTING UNDERGROUND UTILITIES SHOWN HEREON ARE BASED UPON AVAILABLE INFORMATION. IF DURING CONSTRUCTION OPERATIONS THE CONTRACTOR SHOULD ENCOUNTER UTILITIES OTHER THAN THOSE SHOWN ON THE PLANS, THEY SHOULD IMMEDIATELY NOTIFY THE ENGINEER AND TAKE NECESSARY AND PROPER STEPS TO PROTECT THE UTILITY AND ASSURE THE CONTINUANCE OF SERVICE. THE ENGINEER DOES NOT CERTIFY TO THE LOCATION OR EXISTENCE OF ANY UNDERGROUND UTILITY SHOWN ON THIS PLAN. THE CONTRACTOR SHALL CONTACT "MISS UTILITY" AT 811 PRIOR TO COMMENCEMENT OF ANY EXCAVATION.

2. TOPOGRAPHIC INFORMATION SHOWN HEREON IS BASED ON THE FIELD RUN SURVEY PERFORMED BY URBAN, LTD IN OCT, 2021. HORIZONTAL DATUM IS NAD1983 AND VERTICAL DATUM IS NAVD1988.

3. SUBSURFACE UTILITIES SHOWN PER MISS UTILITY MARK OUT FIELD LOCATION.

4. NO TITLE REPORT FURNISHED.

5. CLEARING AND GRADING SHALL BE IN ACCORDANCE WITH THE GRADING AND EROSION CONTROL PLANS AND STANDARDS SET FORTH BY THE VIRGINIA EROSION AND SEDIMENTATION CONTROL HANDBOOK. ALL LAND ON OR OFF-SITE WHICH IS DISTURBED BY THIS IMPROVEMENT AND WHICH IS NOT BEING BUILT UPON OR SURFACED SHALL BE ADEQUATELY STABILIZED TO CONTROL EROSION AND SEDIMENTATION.

6. THE CONTRACTOR SHALL PROVIDE ADEQUATE MEANS OF CLEANING TRUCKS AND/OR OTHER EQUIPMENT PRIOR TO ENTERING THE TOWN STREETS. IT IS THE CONTRACTOR'S RESPONSIBILITY TO CLEAN STREETS, ALLAY DUST AND TO TAKE WHATEVER MEASURES NECESSARY TO INSURE THAT THE ROAD IS MAINTAINED IN A CLEAN, MUD AND DUST FREE CONDITION AT ALL TIMES. SEE SILTATION AND EROSION CONTROL PLANS/NARRATIVE FOR ADDITIONAL INFORMATION.

7. THE CONTRACTOR SHALL PROTECT AND ADJUST, AS REQUIRED, ALL EXISTING MANHOLES AND VALVES WITHIN THE LIMITS OF DISTURBANCE. THE CONTRACTOR SHALL BE RESPONSIBLE FOR ANY DAMAGE THAT MAY OCCUR BY HIS FAILURE TO PROPERLY PROTECT THE EXISTING MANHOLES AND VALVES.

8. IF APPLICABLE, ANY UTILITIES AND UTILITY POLES TO BE BRACED DUE TO THIS IMPROVEMENT SHALL BE DONE AT THE EXPENSE OF THE CONTRACTOR PURSUANT TO THE TOWN'S PAY ITEM SCHEDULE. THE CONTRACTOR IS RESPONSIBLE FOR COORDINATING AND SCHEDULING ALL UTILITY WORK REQUIRED. THE TOWN WILL COORDINATE WITH DOMINION VIRGINIA POWER IN REGARDS TO RELOCATING ANY POLES DUE TO THIS IMPROVEMENT.

9. ALL STORM SEWER STRUCTURES AND PIPING WITHIN THE AREA OF CONSTRUCTION SHALL BE CLEANED OUT FOLLOWING THE COMPLETION OF CONSTRUCTION.

10. ANY DAMAGE TO EXISTING STREETS, PUBLIC UTILITIES OR PRIVATE UTILITIES, INCLUDING BUT NOT LIMITED TO, VALVE BOXES, WATER METER LIDS, FRAMES OR CROCKS AND WATER LATERALS, DUE TO THIS IMPROVEMENT SHALL BE THE RESPONSIBILITY OF THE CONTRACTOR.

11. ALL CONSTRUCTION DUE TO THIS IMPROVEMENT IS TO BE PERFORMED IN ACCORDANCE WITH THE STANDARDS SET FORTH BY THE STATE OF VIRGINIA AND THE TOWN OF VIENNA.

12. THE CONTRACTOR SHALL BE RESPONSIBLE FOR NOTIFYING THE TOWN AND THE ENGINEER/SURVEYOR OF ANY CHANGES OR CONDITIONS ATTACHED TO PERMITS OBTAINED FROM TOWN OF VIENNA, OR ANY OTHER AUTHORITY ISSUING PERMITS.

13. A SMOOTH GRADE SHALL BE MAINTAINED FROM CENTERLINE TO THE CURB AND GUTTER TO PRECLUDE THE FORMING OF FALSE GUTTERS AND/OR PONDING OF WATER ON ANY ROAD OR PARKING AREA.

14. PLANS MAY NOT INCLUDE MINOR SITE FEATURES SUCH AS MAILBOXES, PRIVATE LIGHTING FIXTURES, SIGNS, ETC. IT IS THE RESPONSIBILITY OF THE CONTRACTOR TO PERFORM A PRE-CONSTRUCTION SURVEY OF THE PROPOSED STREETS TO LOCATE THESE PRIVATE FEATURES AND RELOCATE THEM AS NECESSARY.

15. THE CONTRACTOR SHALL INSPECT ALL EXISTING UTILITIES FOR NECESSARY REPAIRS PRIOR TO INITIATION OF CONSTRUCTION ACTIVITIES. IF ANY SUCH UTILITY REPAIRS ARE REQUIRED, THE CONTRACTOR WILL COORDINATE THESE REPAIRS WITH THE TOWN. THE CONTRACTOR SHALL BE RESPONSIBLE FOR ANY DAMAGE TO EXISTING OR PROPOSED UTILITIES THAT OCCURS DURING CONSTRUCTION ACTIVITIES. DAMAGED UTILITIES SHALL BE REPAIRED IN A TIMELY FASHION TO LIMIT THE INTERRUPTION OF SERVICE TO THE AFFECTED RESIDENTS.

16. THE CONTRACTOR SHALL NOTIFY THE TOWN AND ENGINEER OF ANY DISCREPANCIES BETWEEN EXISTING FIELD CONDITIONS AND THOSE SHOWN ON THE CONTRACT DOCUMENTS THAT IMPACT PROPOSED CONSTRUCTION ACTIVITIES.

17. ALL CONCRETE AND PAVEMENT DEMOLITION/REMOVAL SHALL EMPLOY SAW CUT JOINTS.

18. ROOT PRUNING SHALL BE TO THE DEPTH OF EXCAVATION, OR 24 INCHES, WHICHEVER IS LESS. A TRENCHER OR VIBRATORY PLOW SHALL BE USED TO PRUNE ALL ROOTS. ROOTS OVER ONE AND ONE-HALF INCHES (1.5") IN DIAMETER SHALL BE CLEANLY CUT BY HAND.

19. A ROOT BIOSTIMULANT SHALL BE APPLIED IN ACCORDANCE WITH THE MANUFACTURER'S RECOMMENDATIONS TO ALL TREES THAT ARE ROOT PRUNED.

20. CONCRETE PIPE TO BE CLASS III UNLESS OTHERWISE SPECIFIED.

21. SIGHT DISTANCE TO BE MAINTAINED BY CONTRACTOR DURING CONSTRUCTION.

22. THE CONTRACTOR SHALL PROVIDE A SMOOTH GRADE FROM THE LIMITS OF DISTURBANCE TO THE BACK OF SIDEWALK.

23. VDOT STD. IS-1, INLET SHAPING, TO BE UTILIZED ON ALL PROPOSED OR MODIFIED EXISTING STORM STRUCTURES.

24. AIR QUALITY PERMIT NOT REQUIRED PER STATE AIR POLLUTION CONTROL BOARD REGULATION ACQR VII, SECTION 2.706 (G)(2)(1).

25. ALL FINISHED GRADING, SEEDING, SODDING OR PAVING SHALL BE DONE IN SUCH A MANNER TO PRECLUDE THE PONDING OF WATER ON THE SITE.

26. THE CONTRACTOR SHALL INSURE THAT ALL CONSTRUCTION CONFORMS WITH CURRENT FEDERAL, STATE AND LOCAL LAWS AND REGULATIONS, INCLUDING FEDERAL REGULATIONS CONTAINED WITHIN "THE AMERICANS WITH DISABILITIES ACT," ENACTED ON JULY 26, 1990 (AKA "ADA").

27. ALL EARTHWORK OPERATIONS SHALL CONFORM TO THE GEOTECHNICAL NOTES AND DETAILS IF PROVIDED.

28. PRIOR TO ANY LAND DISTURBANCE ACTIVITY WITHIN THE AREA OF WASHINGTON GAS, AND F.C.W.A. MAJOR TRANSMISSION LINES, THE CONTRACTOR MUST NOTIFY THESE UTILITY COMPANIES IN ADVANCE TO ASSURE THEY CAN INSPECT AND APPROVE THE CONSTRUCTION ACTIVITY.

29. NO VISIBLE EVIDENCE OF ANY PLACE OF BURIAL OR HISTORIC SITE WAS ENCOUNTERED ON THE PROPERTY BY THIS FIRM. IF ANY GRAVE YARD OR HISTORIC SITE IS ENCOUNTERED DURING CONSTRUCTION THE CONTRACTOR SHALL CEASE WORK IN THE AREA IMMEDIATELY AND NOTIFY THE OWNER AND ENGINEER.

30. ALL CONSTRUCTION INVOLVING PROBLEM SOIL MUST BE PERFORMED UNDER THE FULL-TIME INSPECTION OF THE GEOTECHNICAL ENGINEER.

31. THE GEOTECHNICAL ENGINEER SHALL FURNISH A WRITTEN OPINION TO THE TOWN AS TO WHETHER OR NOT WORK HAS BEEN PERFORMED IN ACCORDANCE WITH THE APPROVED PLANS PRIOR TO THE ISSUANCE OF ANY OCCUPANCY OR USE PERMIT.

32. ALL CLEARING, GRADING AND ACTUAL CONSTRUCTION ACTIVITY SHALL BE LIMITED TO BETWEEN THE HOURS OF 7:00 A.M. AND 6:00 P.M., MONDAY THROUGH FRIDAY, AND BETWEEN 8:00 A.M. AND 6:00 P.M. SATURDAY. CONSTRUCTION ACTIVITY ON SUNDAY SHALL BE PROHIBITED. CONTRACTOR SHALL CONFIRM HOURS WITH TOWN OF VIENNA PRIOR TO CONSTRUCTION.

TOWN OF VIENNA NOTES

1. NOTIFY THE TOWN OF VIENNA DEPARTMENT OF PUBLIC WORKS AT 703-255-6380 WHEN WORK IS TO BE STARTED.

2. ALL CONTRACTOR GENERATED DEBRIS MUST BE HAULED AWAY BY THE CONTRACTOR OR OWNER.

3. ALL RUNOFF MUST SHEET FLOW ACROSS PROPERTY LINES UNLESS APPROVED OTHERWISE BY THE DIRECTOR OF PUBLIC WORKS.

4. ALL PRIVATE STORM DRAINS (I.E. ROOF DRAINS, SUMP PUMP ETC.) MUST DAYLIGHT AT A MINIMUM OF 10 FEET FROM A PROPERTY LINE.

5. PRIOR TO THE REMOVAL OF ANY TREES, THE APPLICANT OR THEIR REPRESENTATIVE SHALL CONTACT THE TOWN OF VIENNA ARBORIST AT 703-255-6360 TO COORDINATE HAVING THE TOWN ARBORIST ONSITE DURING ALL TREE REMOVAL.

6. TREE PROTECTION FOR ANY TREE, AS SHOWN ON PLAN, MUST BE INSTALLED PRIOR TO ANY SITE WORK.

ROAD CONSTRUCTION NOTES

1. ALL CONSTRUCTION SHALL CONFORM TO CURRENT TOWN OF VIENNA AND VDOT STANDARDS AND SPECIFICATIONS.

2. THE LOCATIONS OF EXISTING UTILITIES ON THESE DRAWINGS ARE GENERALLY APPROXIMATE. IT IS THE CONTRACTOR WHO IS RESPONSIBLE TO ENSURE THE EXACT HORIZONTAL AND VERTICAL LOCATION OF ALL UTILITIES IN THE AREA OF CONSTRUCTION PRIOR TO COMMENCING WORK. THE CONTRACTOR SHALL NOTIFY THE OWNER AND URBAN ENGINEERING & ASSOC. OF ANY POTENTIAL CONFLICTS PRIOR TO COMMENCING CONSTRUCTION.

3. THE CONTRACTOR SHALL CAREFULLY EXAMINE THE SITE AND MAKE ALL INSPECTIONS NECESSARY IN ORDER TO DETERMINE THE FULL EXTENT OF WORK REQUIRED TO MAKE THE COMPLETED WORK CONFORM TO THE DRAWINGS AND SPECIFICATIONS.

4. WHERE CONFLICTS REQUIRE RELOCATION OF EXISTING UTILITIES (E.G. AT&T, MCI, C&P, VEPCO, MEDIA GENERAL) UTILITY COMPANIES SHALL BE NOTIFIED.

5. ALL EXISTING SIGNS, FENCES, ETC. DISTURBED BY THIS CONSTRUCTION SHALL BE RELOCATED BY THE CONTRACTOR AS NECESSARY PER TOWN OF VIENNA REQUIREMENTS.

6. ALL EXISTING TOWN OF VIENNA TRAFFIC CONTROL EQUIPMENT WILL BE RELOCATED BY THE CONTRACTOR AS NECESSARY PER VDOT REQUIREMENTS.

7. THE CONTRACTOR IS RESPONSIBLE FOR ANY DAMAGE TO EXISTING ROADS AND UTILITIES WHICH OCCUR AS A RESULT OF PROJECT CONSTRUCTION WITHIN OR CONTIGUOUS TO THE SITE.

8. ANY EXISTING C&G AND PAVEMENT TO REMAIN THAT IS DAMAGED DURING CONSTRUCTION SHALL BE REPLACED/REPAIRED TO TOWN OF VIENNA SATISFACTION. C&G TO BE SAW CUT, OTHERWISE REMOVE TO THE NEAREST JOINT.

9. THE CONTRACTOR SHALL CONTACT MISS UTILITY COMPANY REPRESENTATIVE, REVIEW TEST PIT DATA AND ANY OTHER OPERATIONS AVAILABLE TO ENSURE ALL EXISTING UTILITIES IN THE AREA OF CONSTRUCTION ARE SHOWN ON THE PLANS PRIOR TO CONSTRUCTION.

10. WHERE MANHOLES ARE TO BE PLACED IN THE ROAD R/W, THE TOPS SHALL BE OFFSET TO ASSURE THAT THEY AREA POSITIONED TO MINIMIZE IMPACT TO VEHICULAR WHEEL PATHS.

11. THE APPROVAL OF THESE PLANS SHALL IN NO WAY RELIEVE THE OWNER OF COMPLYING WITH OTHER APPLICABLE LOCAL, STATE, AND FEDERAL REQUIREMENTS.

12. ALL FILL MATERIAL REQUIRED TO RAISE GRADES AND UNDER SLABS, WHICH MAY CONSIST OF APPROVED ONSITE SOILS AND/OR OFFSITE BORROW MATERIAL, SHALL BE FREE OF ALL DEBRIS, ORGANIC MATERIAL, AND CLUMPS AND SHALL BE ADJUSTED TO THE PROPER MOISTURE CONTENT BEFORE BEING COMPACTED IN 8" MAXIMUM LAYERS. EACH LAYER TO BE COMPACTED TO 95% DENSITY MODIFIED PROCTOR PER ASTM D1557. BASE AND SUBBASE MATERIAL SHALL BE COMPACTED TO THE REQUIREMENTS OF SECTIONS 308.03, 309.04, AND 309.05 OF VDOT SPECIFICATIONS. SUBGRADE COMPACTION SHALL BE IN ACCORDANCE WITH SECTION 305.03.

13. STANDARD UD-2, UD-3, & UD-4 TO BE UTILIZED IN CONSTRUCTION WITH STANDARD PIPE UNDER DRAIN. UD-2, UD-3, & UD-4 TO BE INSTALLED IN ACCORDANCE WITH VDOT SECTION 108.02, 108.03, AND 108.05.

14. STANDARD GUARDRAILS AND/OR HANDRAILS SHALL BE INSTALLED AT HAZARDOUS LOCATIONS AS DESIGNATED DURING FIELD REVIEW BY THE TOWN OF VIENNA INSPECTOR.

15. THE CONTRACTOR IS RESPONSIBLE FOR ALL TRAFFIC CONTROL. IF REQUIRED, THE DEVELOPER SHALL SUBMIT A SIGNING, STRIPING AND/OR SIGNALIZATION PLAN TO THE VDOT LAND DEVELOPMENT SECTION A MINIMUM OF 30 DAYS PRIOR TO PERMIT APPLICATION. THE DEVELOPER SHALL NOT COMMENCE CONSTRUCTION OF ANY PAVEMENT COURSE WITHOUT AN APPROVED STRIPING PLAN.

16. A 4" (MIN.) LAYER OF STONE IS REQUIRED BENEATH CURB AND GUTTER.

17. ADDITIONAL DITCH LININGS OR SILTATION AND EROSION CONTROL MEASURES SHALL BE PROVIDED, AS DETERMINED NECESSARY BY THE TOWN DURING FIELD REVIEW. ALL COSTS SHALL BE ASSUMED BY THE CONTRACTOR.

18. OVERLAY OF EXISTING PAVEMENT SHALL BE MINIMUM OF 1.25" DEPTH, ANY COSTS ASSOCIATED WITH PAVEMENT OVERLAY, OR THE MILLING OF EXISTING PAVEMENT TO OBTAIN REQUIRED DEPTH, SHALL BE ASSUMED BY THE CONTRACTOR.

VICINITY MAP
SCALE : 1"= 500'

OWNER/DEVELOPER:

TOWN OF VIENNA
since 1890

TOWN OF VIENNA
DEPARTMENT OF PUBLIC WORKS
127 CENTER ST. S.
VIENNA, VA 22108

SURVEY NOTES

TOPOGRAPHICAL SURVEY PERFORMED BY FIELD RUN BY URBAN, LTD.

VERTICAL
NOTE: ELEVATIONS SHOWN HEREON ARE BASED ON STATIC GPS OBSERVATIONS AS PROCESSED BY THE NATIONAL GEODETIC SURVEY, ONLINE POSITIONING USER SERVICE (OPUS), AND ARE REFERENCED TO NORTH AMERICAN VERTICAL DATUM (NAVD) OF 1988.

HORIZONTAL
NOTE: BEARINGS AND COORDINATES SHOWN HEREON ARE BASED ON STATIC GPS OBSERVATIONS AS PROCESSED BY THE NATIONAL GEODETIC SURVEY, ONLINE POSITIONING USER SERVICE (OPUS), AND ARE REFERENCED TO VIRGINIA STATE GRID NORTH ZONE NAD 83 – US SURVEY FOOT.

UTILITIES
UNDERGROUND UTILITIES WERE PAINTED BY UTILITIES SEARCH, INC. AND MAPPED INTO THE BASE BY URBAN, LTD.

SHEET INDEX

NOTICE REQUIRED
CONTRACTORS SHALL NOTIFY OPERATORS WHO MAINTAIN UNDERGROUND UTILITY LINES IN THE AREA OF PROPOSED EXCAVATION OR BLASTING AT LEAST TWO WORKING DAYS, BUT NOT MORE THAN TEN WORKING DAYS PRIOR TO COMMENCEMENT OF EXCAVATION OR DEMOLITION.

CONTACT "MISS UTILITY" AT 1-800-552-7001 FOR THESE UTILITIES

VIRGINIA ELECTRIC & POWER CO.
A.T.& T. CO.
COLUMBIA GAS TRANSMISSION CO.
FAIRFAX CO. SAN. SEWER DIV.
TRANSCO GAS PIPELINE CO.
COLUMBIA GAS OF VIRGINIA
CONTINENTAL TELEPHONE OF VIRGINIA
COLONIAL PIPELINE CO.
FAIRFAX CO. WATER AUTHORITY
WASHINGTON GAS LIGHT CO.
PRINCE WILLIAM ELEC. CO-OP.
PLANTATION PIPELINE CO.
C & P TELEPHONE CO.

CONTACT THESE UTILITIES

TRI-COUNTY ELEC. CO-OP 1-777-2151
FALLS CHURCH WATER SER. 1-241-5078
LOUDOUN WATER 571-291-7880
FAIRFAX CITY WATER SER. 385-7916

EMERGENCY DIAL 911
POLICE – FIRE – RESCUE
777-1021 777-2222

No.	DATE	DESCRIPTION
4	02/19/25	100% PLAN
3	10/18/24	95% REVISION
2	08/02/24	95% PLAN
2	06/25/24	95% DRAFT
1	10/09/18	REVISION PER TOWN OF VIENNA COMMENTS

REVISIONS

PLAN DATE
02-21-2018
04-18-2018
08-13-2018
10-09-2018
06-25-2024
08-07-2024
10-18-2024
02-19-2025

urban
Planners · Engineers · Landscape Architects · Land Surveyors
Urban, Ltd.
7712 Little River Turnpike
Annandale, Virginia 22003
Tel. 703.642.7670
Fax. 703.642.8351
www.urban-ltd.com

COMMONWEALTH OF VIRGINIA
C. RYAN CONNOR
Lic. No.039531
02/19/2025
PROFESSIONAL ENGINEER

COVER SHEET
ROADWAY AND DRAINAGE IMPROVEMENT PLAN
GLYNDON STREET, N.E.
TOWN OF VIENNA
FAIRFAX COUNTY, VIRGINIA
SCALE: AS NOTED
C.I. N/A
DATE: AUG. 2018

SHEET 1 OF 15

FILE No.
PP-2156

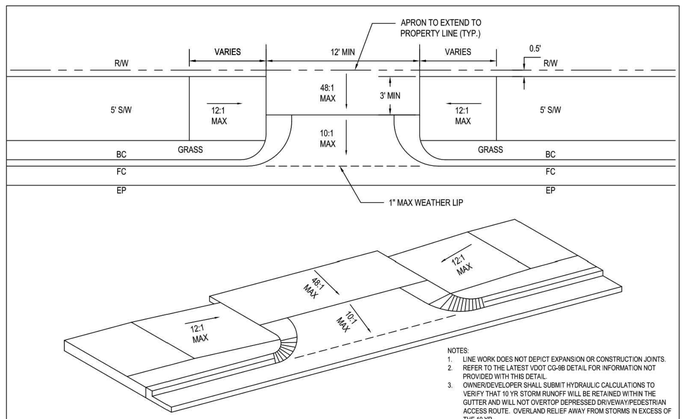

NOTES:
1. LINE WORK DOES NOT DEPICT EXPANSION OR CONSTRUCTION JOINTS.
2. REFER TO THE LATEST VDOT CG-9B DETAIL FOR INFORMATION NOT PROVIDED WITH THIS DETAIL.
3. OWNER/DEVELOPER SHALL SUBMIT HYDRAULIC CALCULATIONS TO VERIFY THAT 10 YR STORM RUNOFF WILL BE RETAINED WITHIN THE GUTTER AND WILL NOT OVERTOP DEPRESSED DRIVEWAY/PEDESTRIAN ACCESS ROUTE. OVERLAND RELIEF AWAY FROM STORMS IN EXCESS OF THE 10 YR.
4. PROVIDE 6" MIN. AGGREGATE BASE UNDER DRIVEWAY APRON.
5. A MINIMUM 1' ASPHALT CUT FRONTING ALL CURB AND GUTTER CONSTRUCTION TO ENSURE PROPER FORMING OF GUTTER PAN.

MODIFIED VDOT CG-9B APRON
TOWN OF VIENNA, VIRGINIA
DEPARTMENT OF PUBLIC WORKS

DRAWING NO. N/A | SCALE N.T.S | SHEET 1 of 1 | 2014-12-30 DATE/REVISION

SOIL MAP
SCALE 1"= 100'

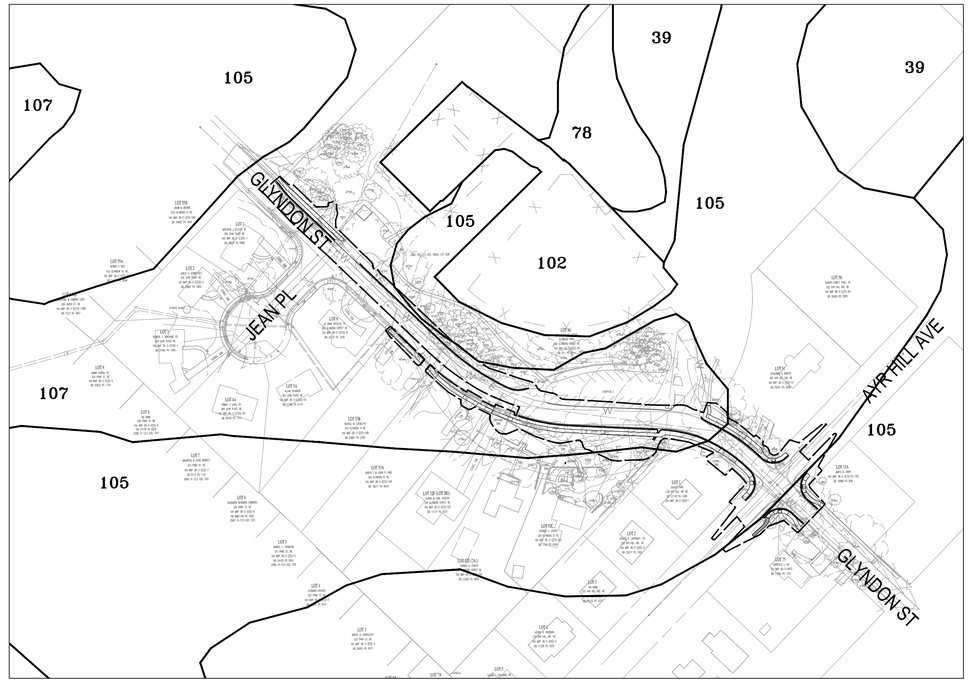

SOIL TYPES

SOIL ID NUMBERS	SOIL SERIES NAME	FOUNDATION SUPPORT	SOIL DRAINAGE	EROSION POTENTIAL	PROBLEM CLASS	HYDROLOGIC SOIL GROUP
105B	WHEATON–GLENELG COMPLEX	GOOD	GOOD	HIGH	IVB	D
107B	WHATON–MEADOWVILLE COMPLEX	FAIR	MARGINAL	MEDIUM	IVB	D

LEGEND

EXISTING	DESCRIPTION	PROPOSED
350	INDEX CONTOUR	350
352	INTERMEDIATE CONTOUR	352
EX. E.P.	EDGE OF PAVEMENT	PROP. E.P.
EX. C & G	CURB AND GUTTER	C & G
	TRANSITION FROM SPILL TO CATCH CURB	SPILL CATCH
	HEADER CURB	
	PROPERTY LINE	
	DEPARTING PROPERTY LINE	
	LOT LINE	
	RIGHT–OF–WAY	
	CENTERLINE	
	FLOOD PLAIN	
	LIMIT OF DISTURBANCE	
	TREE LINE	
	FLOW LINE OF SWALE	
	STREAM	
	OVERLAND RELIEF PATHWAY	
	FENCE LINE	X X
	EASEMENT	
EX 8" W/M	WATER LINE	8" DIP W/M
EX REUSE W/M	REUSE WATER MAIN	RW RW
EX. W/V	WATER VALVE	W
W	REDUCER	W
EX 8" SAN	SANITARY SEWER	8" SAN
EX 18" RCP	STORM SEWER	18" RCP
E	ELECTRIC SERVICE	E
T	TELEPHONE SERVICE	T
G G	GAS LINE	G G
IRR	IRRIGATION LINE	IRR
	OVERHEAD WIRE	
FO	FIBER OPTIC LINE	FO
UNK	UNKNOWN LINE	UNK
+ 25.32	SPOT ELEVATION	+25.32
	UTILITY POLE	
	GUY WIRE	
MB	MAILBOX	MB
	SIGN	
EX	SANITARY SEWER IDENTIFIER	A 1/A
EX	STORM DRAIN IDENTIFIER	2 1/2
W	EASEMENT IDENTIFIER	W
	WATER METER	
	WATER VALVE	
	FIRE HYDRANT	
CV	COMMUNICATION VAULT (MANHOLE)	CV
CP	COMMUNICATION PEDESTAL	CP
SH	SPRINKLER HEAD	SH
ICV	IRRIGATION CONTROL VALVE	ICV
EOP	END OF PAVING	EOP
	PARKING INDICATOR INDICATES THE NUMBER OF TYPICAL PARKING SPACES	25
	STREET LIGHT	
	VEHICLES PER DAY (TRAFFIC COUNT)	165T ADT
	TEST PIT REQUIRED	
	CRITICAL SLOPE SLOPES TO BE STABILIZED PURSUANT TO VIRGINIA EROSION AND SEDIMENT CONTROL HANDBOOK	
	HANDICAP RAMP DENOTES LOCATION OF STANDARD RAMP CONSTRUCTION	
	DENOTES CLEAR SIGHT TRIANGLE	
15" DT	DECIDUOUS TREE	
	BENCHMARK	BM #1 TRV #1 ELEV=101.62
	ASPHALT	
	ASPHALT TRAIL	
	CONCRETE SIDEWALK	
	END WALLS	
	END SECTIONS	
	STOP SIGN	
	STREET SIGN	
	GEOTHERMAL LINE	GEO
	WETLANDS	

H-3.1 DRIVEWAY ENTRANCES

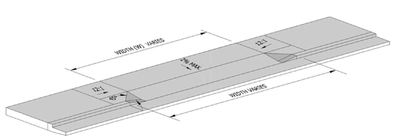

NOTES:
1. WHEN DRIVEWAY WIDTH EXCEEDS 16' A 3/4" MIN. DEPTH SCORED JOINT SHALL BE PLACED ON CENTERLINE OF DRIVEWAY ENTRANCE OR EVERY 10'.
2. CONCRETE DRIVEWAY ENTRANCE SHALL BE POURED MONOLITHICALLY.
3. FOR GRAVEL DRIVEWAY, 4' OF 4" THICK ASPHALT SHALL BE PLACED AT BACK OF THE CONCRETE APRON FOR THE WIDTH OF THE DRIVE.
4. PROVIDE 6" MINIMUM AGGREGATE BASE HAVING MINIMUM CBR-30 UNDER DRIVEWAY ENTRANCE.
5. OWNER SHALL DEDICATE ALL PERMANENT EASEMENTS NECESSARY TO PROVIDE ADA COMPLIANT DRIVEWAY ENTRANCE AND SIDEWALK IF EXISTING OR PROPOSED SIDEWALK INTERSECTS DRIVEWAY.
6. OWNER/DEVELOPER SHALL SUBMIT HYDRAULIC CALCULATIONS TO VERIFY THAT 10 YR. STORM RUNOFF WILL BE RETAINED WITHIN THE GUTTER AND WILL NOT OVERTOP DEPRESSED DRIVEWAY/PEDESTRIAN ACCESS ROUTE. OVERLAND RELIEF AWAY FROM STRUCTURES SHALL BE DEMONSTRATED FOR STORMS IN EXCESS OF 10 YRS.
7. DETAIL DW-2.2 SHALL ONLY BE USED WHEN DW-2.0 OR DW-2.1 WOULD INHIBIT VEHICULAR USE OF THE DRIVEWAY.

CONCRETE DRIVEWAY ENTRANCE | 07-08, 04-10 | REVISION & DATE

ARLINGTON VIRGINIA — ARLINGTON COUNTY, VIRGINIA, DEPARTMENT OF ENVIRONMENTAL SERVICES | DRAWING NO. DW-2.2 Sheet 2 of 2

H-3.1 DRIVEWAY ENTRANCES

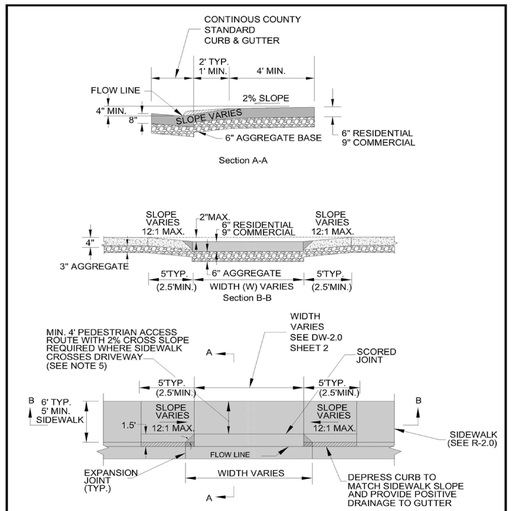

CONCRETE DRIVEWAY ENTRANCE | 07-08, 04-10 | REVISION & DATE

ARLINGTON VIRGINIA — ARLINGTON COUNTY, VIRGINIA, DEPARTMENT OF ENVIRONMENTAL SERVICES | DRAWING NO. DW-2.2 Sheet 1 of 2

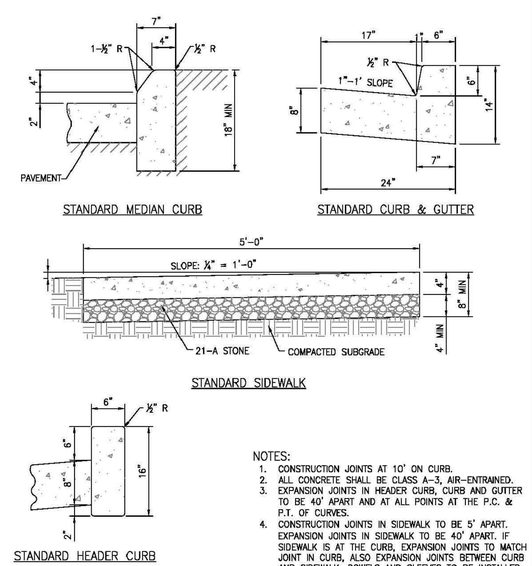

NOTES:
1. CONSTRUCTION JOINTS AT 10' ON CURB.
2. ALL CONCRETE SHALL BE CLASS A–3, AIR–ENTRAINED.
3. EXPANSION JOINTS IN HEADER CURB, CURB AND GUTTER TO BE 40' APART AND AT ALL POINTS AT THE P.C. & P.T. OF CURVES.
4. CONSTRUCTION JOINTS IN SIDEWALK TO BE 5' APART. EXPANSION JOINTS IN SIDEWALK TO BE 40' APART. IF SIDEWALK IS AT THE CURB, EXPANSION JOINTS TO MATCH JOINT IN CURB, ALSO EXPANSION JOINTS BETWEEN CURB AND SIDEWALK. DOWELS AND SLEEVES TO BE INSTALLED IN C&G JOINTS WHERE SUB–GRADE IS UNSTABLE.
5. EXPANSION JOINTS REQUIRED WHERE SIDEWALKS MEET DRIVEWAY APRONS.

STANDARD CURB,GUTTER & SIDEWALK
TOWN OF VIENNA
DEPARTMENT OF PUBLIC WORKS
PREPARED: 11-10-2010
REVISED: 5-18-2011

No.	DATE	DESCRIPTION
4	02/19/25	100% PLAN
3	10/18/24	95% REVISION
2	08/02/24	95% PLAN
2	06/25/24	95% DRAFT
1	10/09/18	REVISION PER TOWN OF VIENNA COMMENTS

REVISIONS

PLAN DATE
02-21-2018
04-18-2018
08-13-2018
10-09-2018
06-25-2024
08-02-2024
10-18-2024
02-19-2025

Urban, Ltd.
7712 Little River Turnpike
Annandale, Virginia 22003
Tel. 703.642.8191
Fax. 703.642.8251
www.urban-ltd.com
Planners·Engineers·Landscape Architects·Land Surveyors

COMMONWEALTH OF VIRGINIA
C. RYAN CONNOR
Lic. No.0399531
02/19/2025
PROFESSIONAL ENGINEER

NOTES AND DETAILS
ROADWAY AND DRAINAGE IMPROVEMENT PLAN
GLYNDON STREET, N.E.
TOWN OF VIENNA
FAIRFAX COUNTY, VIRGINIA

DATE: AUG. 2018
SCALE: N/A
C.I. N/A

SHEET 2 OF 15

FILE No. PP-2156

2016 ROAD & BRIDGE STANDARDS

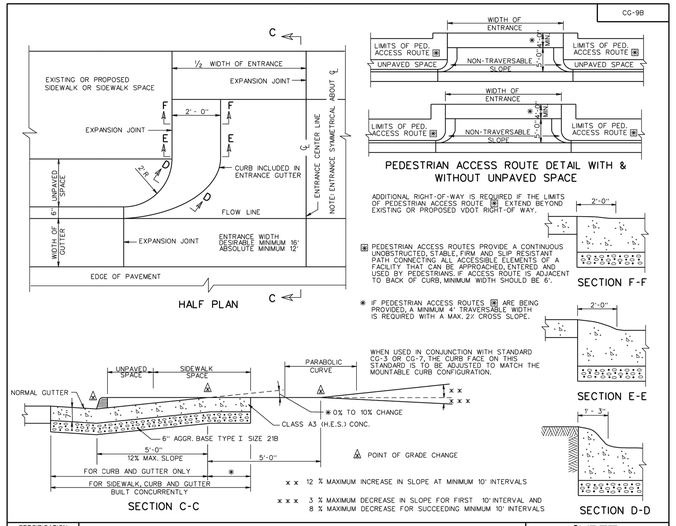

2016 ROAD & BRIDGE STANDARDS

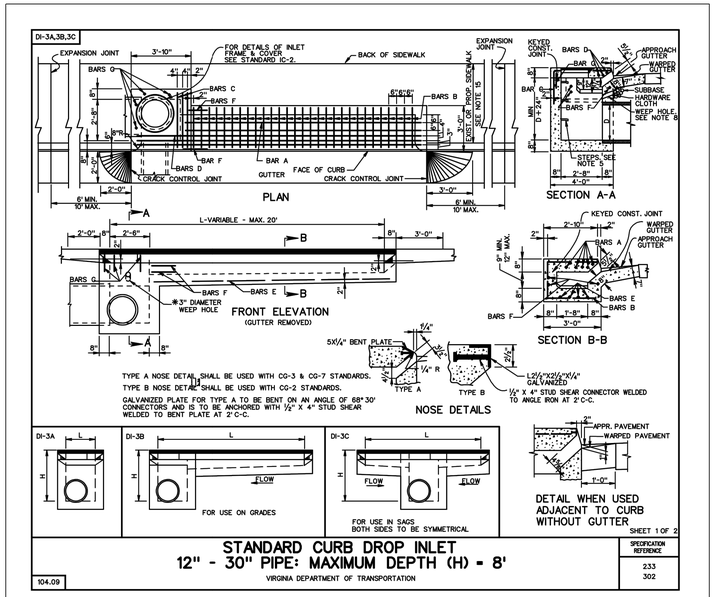

GLYNDON STREET TYPICAL SECTION (NORTH BOUND STA:10+00 TO STA:19+17.88)

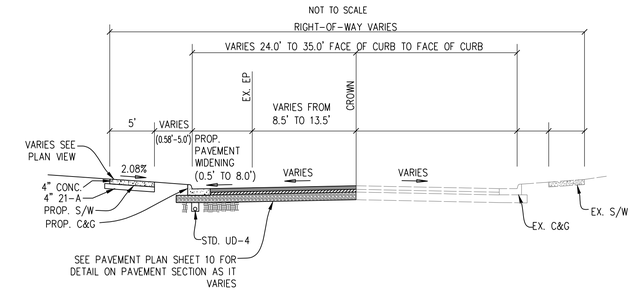

GLYNDON STREET TYPICAL SECTION (SOUTH BOUND STA:14+65.33 TO STA: 19+17.88)

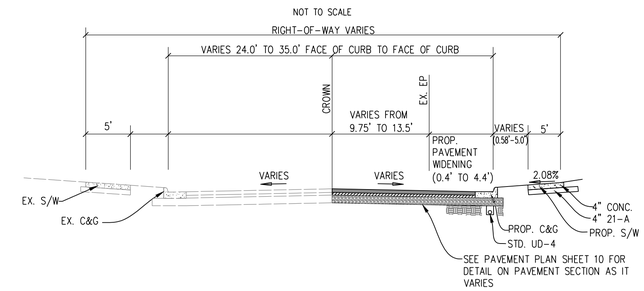

PAVEMENT NOTES

1. METHODS AND MATERIALS USED SHALL CONFORM TO CURRENT TOWN AND VDOT STANDARDS AND SPECIFICATIONS.
2. A SMOOTH GRADE SHALL BE MAINTAINED FROM THE CENTERLINE OF THE EXISTING ROAD TO THE PROPOSED EDGE OF PAVEMENT TO PRECLUDE THE FORMING OF FALSE GUTTERS AND/OR THE PONDING OF ANY WATER IN THE ROADWAY.
3. THE CONTRACTOR IS RESPONSIBLE FOR ALL TRAFFIC CONTROL.
4. THE PROPOSED PAVEMENT THICKNESS ARE BASED ON THE PAVEMENT DESIGN GUIDE (2015), PAVEMENT SECTION C.
5. PROPOSED ROAD IMPROVEMENTS ASPHALT TO MATCH EXISTING (CORES REQUIRED) AND TO BE VALIDATED WITH CBR RESULTS AT TIME OF CONSTRUCTION.
6. A 4" (MIN.) LAYER OF STONE IS REQUIRED BENEATH CURB AND GUTTER.
7. THE TOP 12" OF SUBGRADE TO BE COMPACTED TO 95% OF MAXIMUM DRY DENSITY PER STANDARD PROCTOR TEST WITHIN ±2% OPTIMUM MOISTURE.

2016 ROAD & BRIDGE STANDARDS

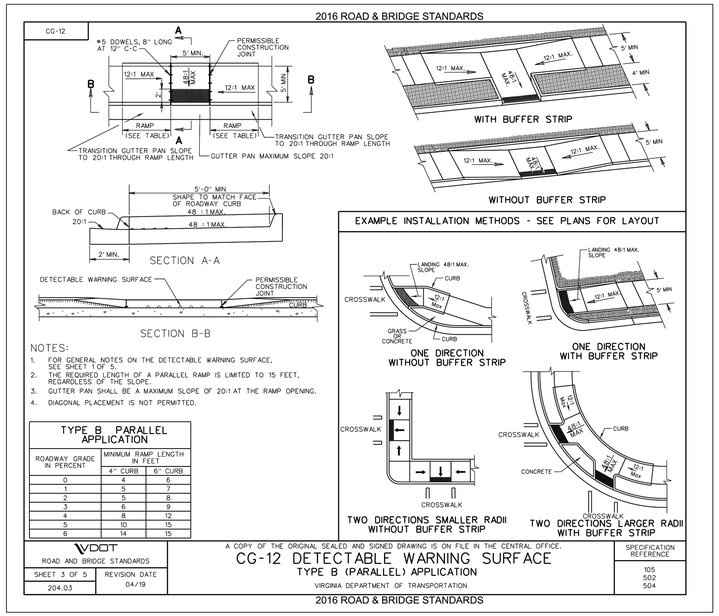

2016 ROAD & BRIDGE STANDARDS

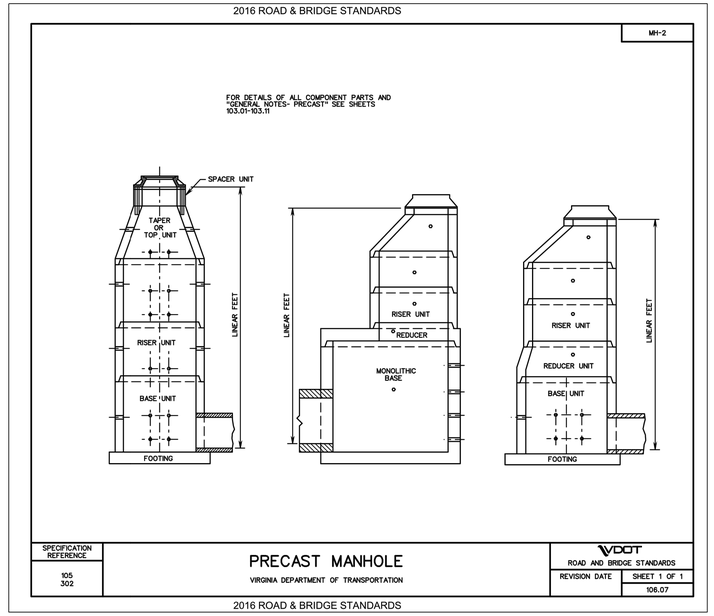

2016 ROAD & BRIDGE STANDARDS

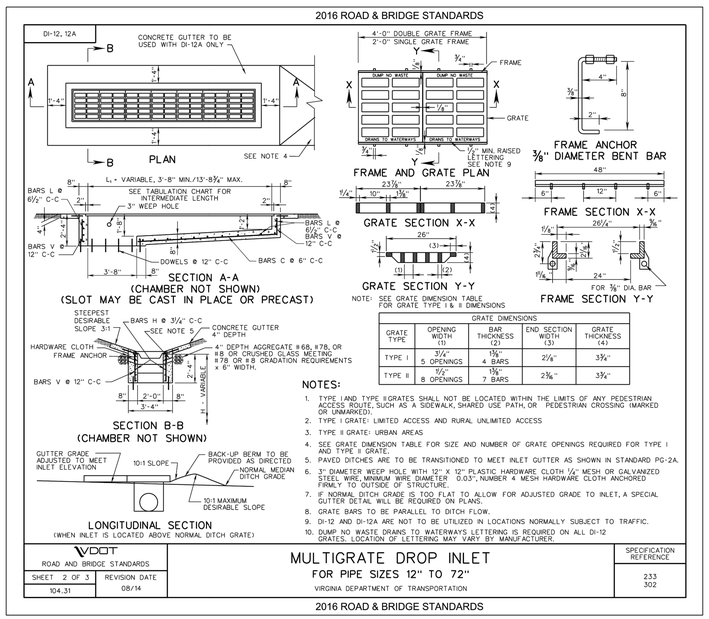

2016 ROAD & BRIDGE STANDARDS

No.	DATE	DESCRIPTION
4	02/19/25	100% PLAN
3	10/18/24	95% REVISION
2	08/02/24	95% PLAN
2	06/25/24	95% DRAFT
1	10/09/18	REVISION PER TOWN OF VIENNA COMMENTS

REVISIONS

PLAN DATE
02-21-2018
04-18-2018
08-13-2018
10-09-2018
06-25-2024
10-16-2024
02-19-2025

Urban, Ltd.
7712 Little River Turnpike
Annandale, Virginia 22003
Tel. 703.642.8127
Fax. 703.642.8251
www.urban-ltd.com
Planners·Engineers·Landscape Architects·Land Surveyors

COMMONWEALTH OF VIRGINIA
C. RYAN CONNOR
Lic. No.0399531
02/19/2025
PROFESSIONAL ENGINEER

NOTES AND DETAILS
ROADWAY AND DRAINAGE IMPROVEMENT PLAN
GLYNDON STREET, N.E.
TOWN OF VIENNA
FAIRFAX COUNTY, VIRGINIA

SCALE: N/A
C.I. N/A
DATE: AUG. 2018

SHEET 3 OF 15

FILE No. PP-2156

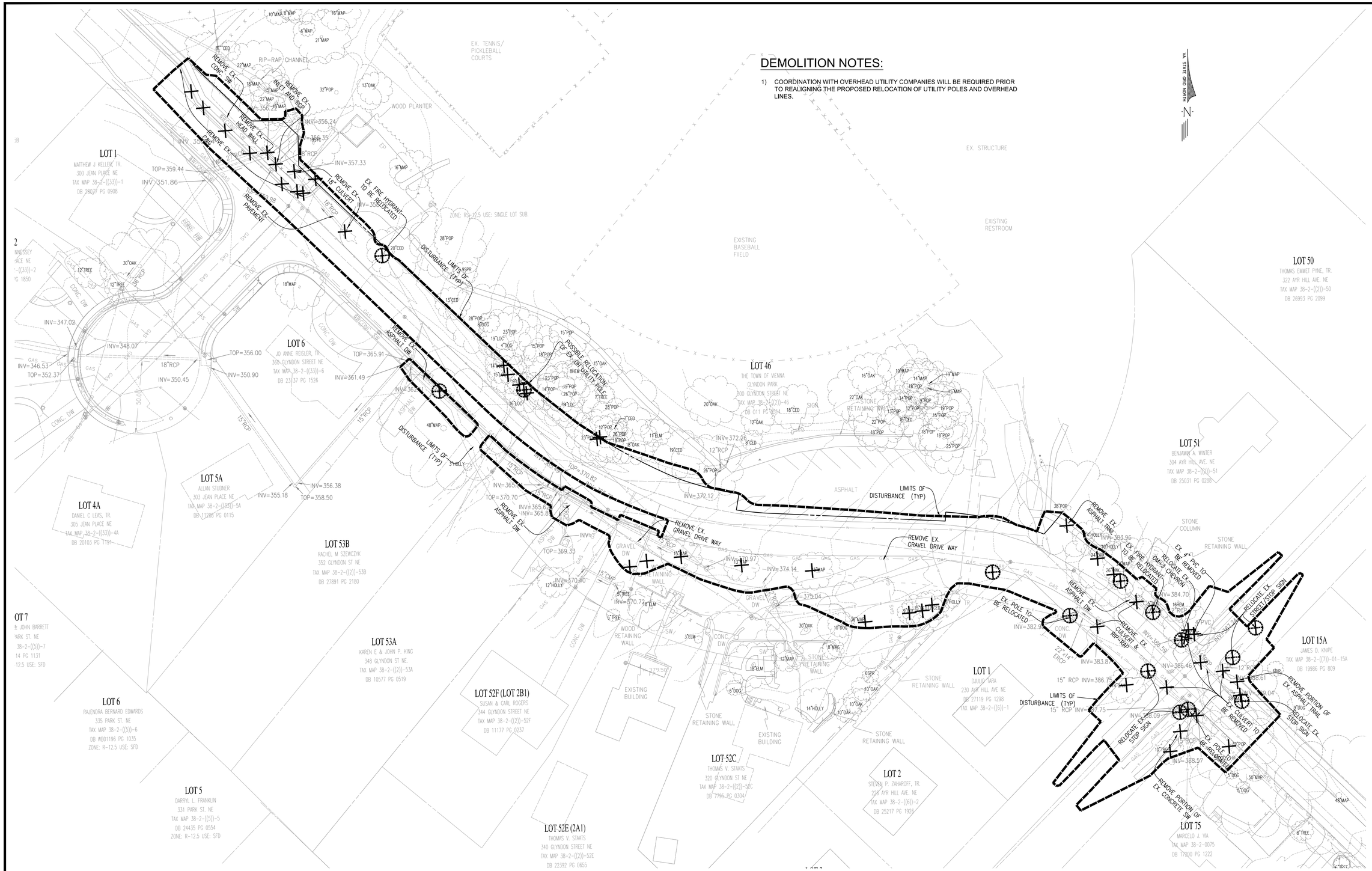

DEMOLITION NOTES:

1) COORDINATION WITH OVERHEAD UTILITY COMPANIES WILL BE REQUIRED PRIOR TO REALIGNING THE PROPOSED RELOCATION OF UTILITY POLES AND OVERHEAD LINES.

NOTE:
PRIOR TO BEGINNING EXCAVATION, CONTRACTOR SHALL CONTACT TOWN ARBORIST TO COORDINATE ROOT PRUNING AND ROOT PROTECTION METHODS WHERE CRITICAL ROOT ZONES FALL WITHIN THE LIMITS OF CLEARING AND GRADING IN ORDER TO MAXIMIZE THE POTENTIAL FOR TREE SAVE.

TREE TO BE REMOVED

ITEM TO BE REMOVED

ITEM TO BE RELOCATED/OR RESET IN PLACE (SEE SITE PLAN FOR MORE DETAIL)

No.	DATE	DESCRIPTION
4	02/19/25	100% PLAN
3	10/18/24	95% REVISION
2	08/02/24	95% PLAN
2	06/25/24	95% DRAFT
1	10/09/18	REVISION PER TOWN OF VIENNA COMMENTS

REVISIONS

PLAN DATE
02-21-2018
04-18-2018
08-13-2018
10-09-2018
06-25-2024
08-02-2024
10-18-2024
02-19-2025

Urban, Ltd.
7712 Little River Turnpike
Annandale, Virginia 22003
Tel. 703-642-8080
Fax. 703-642-8251
www.urban-ltd.com
Planners-Engineers-Landscape Architects-Land Surveyors

COMMONWEALTH OF VIRGINIA
C. RYAN CONNOR
Lic. No.039531
02/19/2025
PROFESSIONAL ENGINEER

EXISTING CONDITIONS AND DEMOLITION PLAN

ROADWAY AND DRAINAGE IMPROVEMENT PLAN
GLYNDON STREET, N.E.

TOWN OF VIENNA
FAIRFAX COUNTY, VIRGINIA

SCALE: 1"=30'
C.I. 1'
DATE: AUG. 2018

SHEET 4 OF 15

FILE No. PP-2156

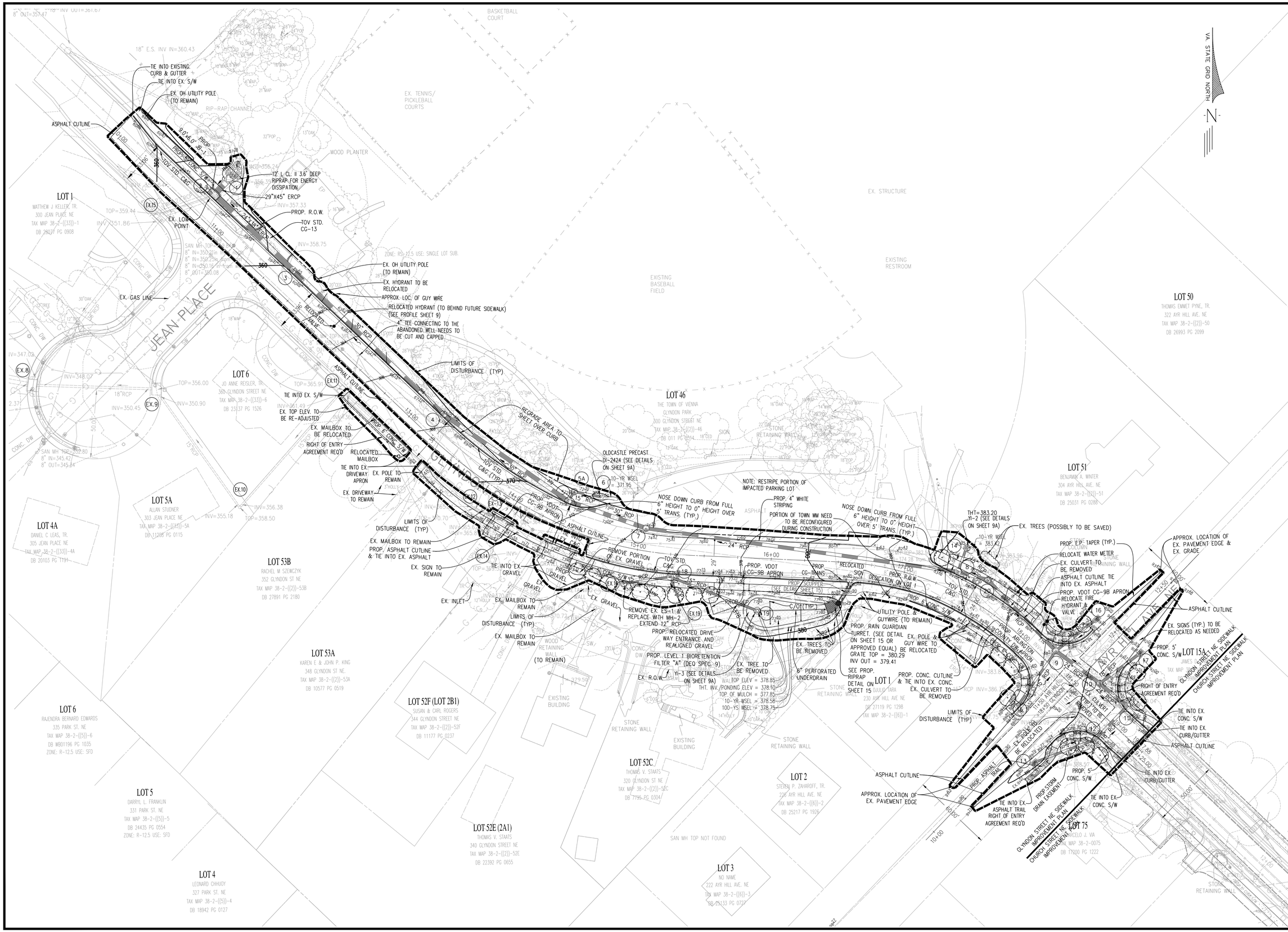

No.	DATE	DESCRIPTION
4	02/19/25	100% PLAN
3	10/18/24	95% REVISION
2	08/02/24	95% PLAN
2	06/25/24	95% DRAFT
1	10/09/18	REVISION PER TOWN OF VIENNA COMMENTS

REVISIONS

PLAN DATE
02-21-2018
04-18-2018
08-13-2018
10-09-2018
06-25-2024
08-02-2024
10-18-2024
02-19-2025

Urban, Ltd.
7712 Little River Turnpike
Annandale, Virginia 22003
Tel. 703.642.8300
Fax. 703.642.8351
www.urban-ltd.com
Planners · Engineers · Landscape Architects · Land Surveyors

COMMONWEALTH OF VIRGINIA
C. RYAN CONNOR
Lic. No.039531
02/19/2025
PROFESSIONAL ENGINEER

ROADWAY AND DRAINAGE IMPROVEMENTS PLAN

ROADWAY AND DRAINAGE IMPROVEMENT PLAN
GLYNDON STREET, N.E.
TOWN OF VIENNA
FAIRFAX COUNTY, VIRGINIA

SCALE: 1"=20' | C.I. 1' | DATE: AUG. 2018

SHEET 5 OF 15

FILE No. PP-2156

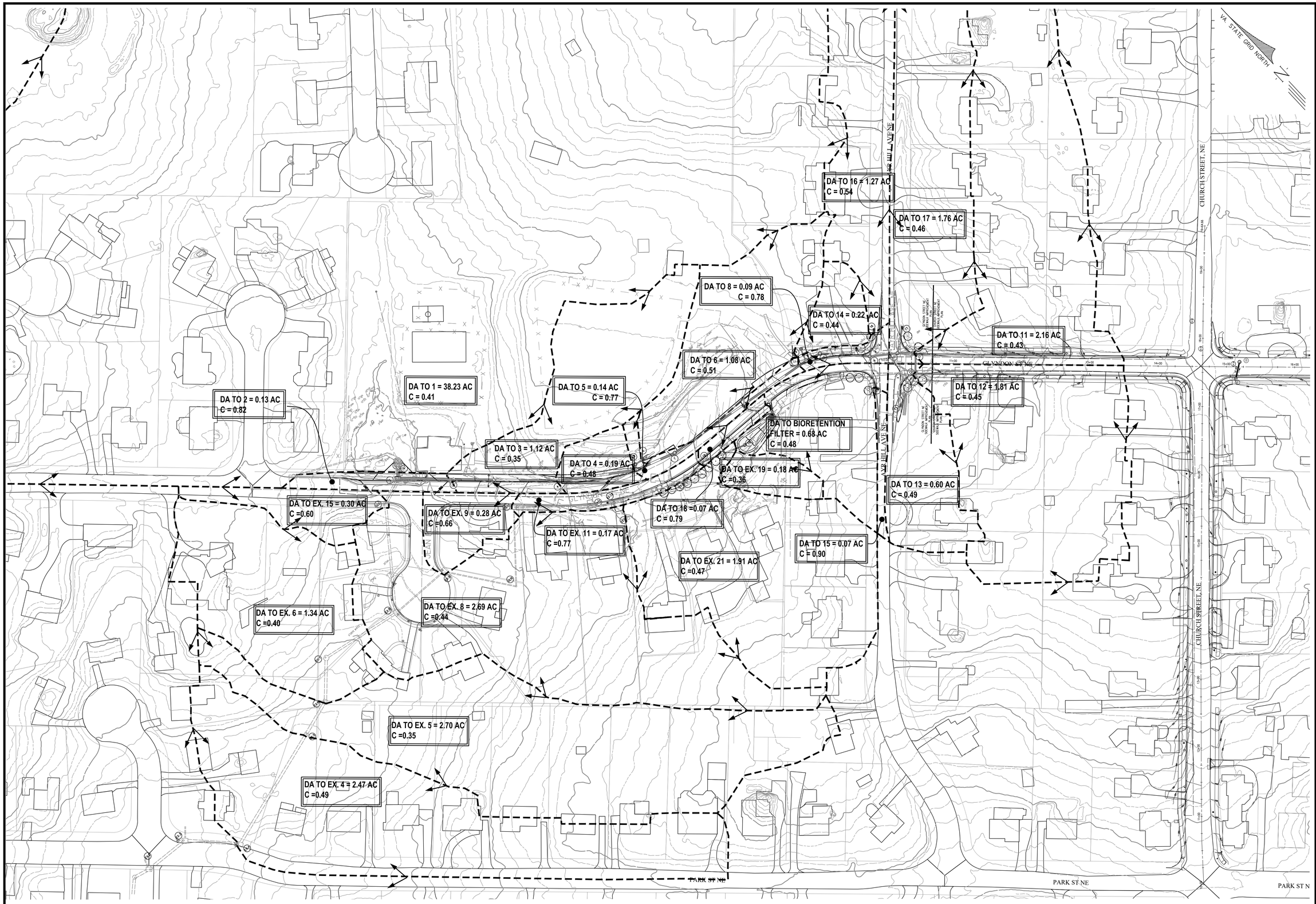

NOTE: DRAINAGE DIVIDES DETERMINED FROM FAIRFAX COUNTY CONTOUR MAP AND SURVEY DATA OF EXISTING CONDITIONS.

No.	DATE	DESCRIPTION
4	02/19/25	100% PLAN
3	10/18/24	95% REVISION
2	08/02/24	95% PLAN
2	06/25/24	95% DRAFT
1	10/09/18	REVISION PER TOWN OF VIENNA COMMENTS

REVISIONS

PLAN DATE
02-21-2018
04-18-2018
08-13-2018
10-09-2018
06-25-2024
08-02-2024
10-18-2024
02-19-2025

Urban, Ltd.
7712 Little River Turnpike
Annandale, Virginia 22003
Tel. 703.642.0700
Fax. 703.642.8251
www.urban-ltd.com
Planners · Engineers · Landscape Architects · Land Surveyors

COMMONWEALTH OF VIRGINIA
C. RYAN CONNOR
Lic. No.0395531
02/19/2025
PROFESSIONAL ENGINEER

DRAINAGE DIVIDES

ROADWAY AND DRAINAGE IMPROVEMENT PLAN
GLYNDON STREET, N.E.

TOWN OF VIENNA
FAIRFAX COUNTY, VIRGINIA

SCALE: 1"=60'
C.I. 1'
DATE: AUG. 2018

SHEET 6 OF 15

FILE No. PP-2156

No.	DATE	DESCRIPTION
4	02/19/25	100% PLAN
3	10/18/24	95% REVISION
2	08/02/24	95% PLAN
2	06/25/24	95% DRAFT
1	10/09/18	REVISION PER TOWN OF VIENNA COMMENTS

REVISIONS

PLAN DATE
02-21-2018
04-18-2018
08-13-2018
10-09-2018
06-25-2024
08-02-2024
10-18-2024
02-19-2025

Urban, Ltd.
7712 Little River Turnpike
Annandale, Virginia 22003
Tel. 703.642.0800
Fax. 703.642.8251
www.urban-ltd.com
Planners · Engineers · Landscape Architects · Land Surveyors

COMMONWEALTH OF VIRGINIA
C. RYAN CONNOR
Lic. No.039531
02/19/2025
PROFESSIONAL ENGINEER

STORM SEWER PROFILES

ROADWAY AND DRAINAGE IMPROVEMENT PLAN
GLYNDON STREET, N.E.

TOWN OF VIENNA
FAIRFAX COUNTY, VIRGINIA

SCALE: H:1"=50', V: 1"=5'
C.I. 1'
DATE: AUG. 2018

SHEET
7
OF
15

FILE No.
PP-2156

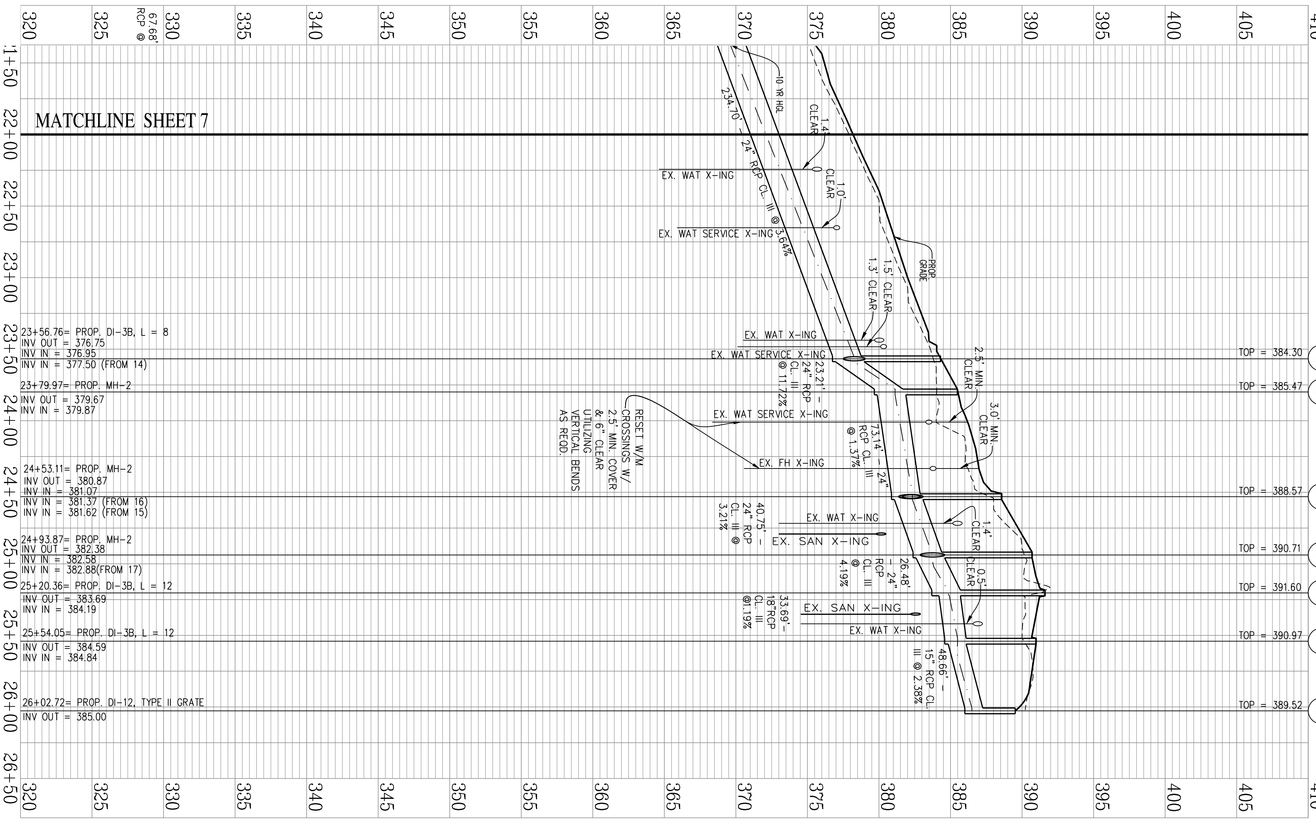

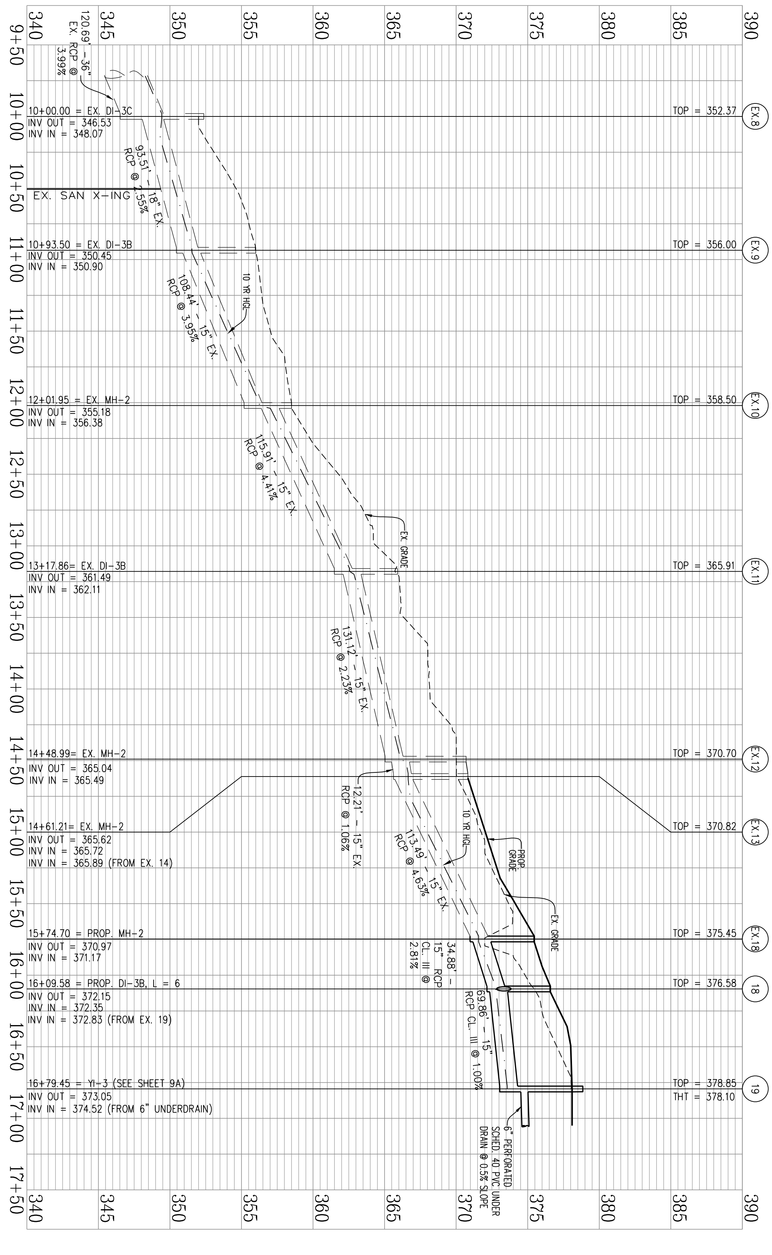

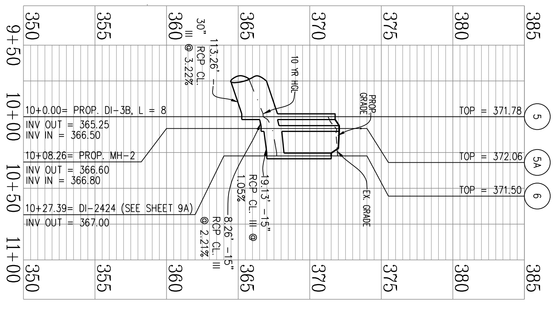

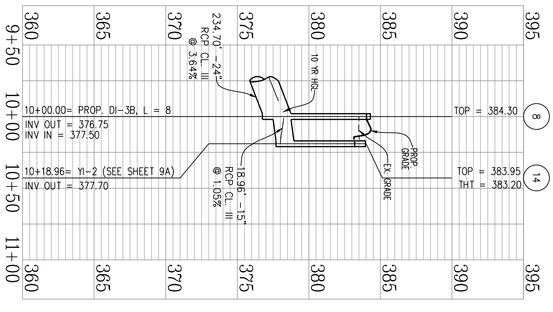

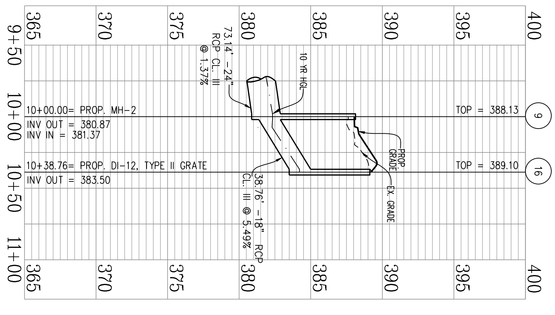

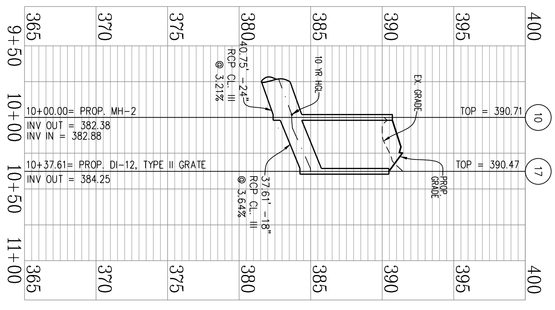

STORM SEWER PROFILES

ROADWAY AND DRAINAGE IMPROVEMENT PLAN
GLYNDON STREET, N.E.

TOWN OF VIENNA
FAIRFAX COUNTY, VIRGINIA

SCALE: H:1"=50', V: 1"=5' C.I. 1' DATE: AUG. 2018

COMMONWEALTH OF VIRGINIA
C. RYAN CONNOR
Lic. No. 038631
02/19/2025
PROFESSIONAL ENGINEER

urban
Planners · Engineers · Landscape Architects · Land Surveyors

Urban, Ltd.
7712 Little River Turnpike
Annandale, Virginia 22003
Tel. 703.642.8080
Fax. 703.642.8251
www.urban-ltd.com

PLAN DATE
02-21-2018
04-18-2018
08-13-2018
10-09-2018
06-25-2024
08-02-2024
10-18-2024
02-19-2025

No.	DATE	DESCRIPTION
4	02/19/25	100% PLAN
3	10/18/24	95% REVISION
2	08/02/24	95% PLAN
2	06/25/24	95% DRAFT
1	10/09/18	REVISION PER TOWN OF VIENNA COMMENTS

REVISIONS

SHEET 8 OF 15

FILE No. PP-2156

FIRE HYDRANT PROFILE

SCALE: H: 1"=50' V: 1"=5'

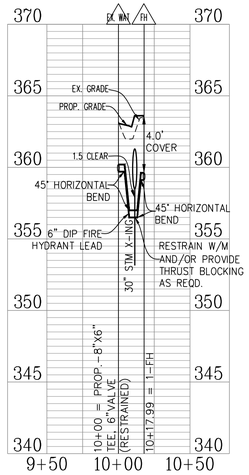

INLET COMPUTATIONS

Inlet ID	Inlet Type	Length	DrainageArea	C	CA	I	Q incr.	QCarryover	QCaptured	QBypass	GutterSlope	CrossSlope, Sx	T (Grade) Spread	T (Sump) Spread	W	Sw	d	E	h	Grate Area	10yr WSEL
		(ft)	(ac)	(C)		(in/hr)	(cfs)	(cfs)	(cfs)	(cfs)	(ft/ft)	(ft/ft)	(ft)	(ft)	(ft)	(ft/ft)	(ft)	(%)	(in)	(sqft)	
*Ex.4	DI-3B	8.00	2.47	0.49	1.21	5.45	6.60	0.00	2.7	3.90	0.05	0.02	9.44	....	1.42	0.083	0.4	41	5.50	....	....
*Ex.5	Yard Inlet	5.00	2.70	0.35	0.95	4.76	4.50	0.00	4.5	0.00	Sag	0.03	....	14.93	....	0.03	0.45	100	6.00	....	
*Ex.6	Yard inlet	5.00	1.34	0.40	0.54	5.26	2.82	0.00	2.82	0.00	Sag	0.03	....	10.93	....	0.03	0.33	100	6.00	....	
*Ex.7	MH	....	0.00	0.00	0.00	0.00	....	....	....	....	....	....	....	....	....	....	....	....	....	....	
*Ex.8	DI-3C	8.00	2.69	0.44	1.18	4.91	5.81	0.24	6.05	0.00	Sag	0.02	....	19.80	1.42	0.083	0.61	100	5.50	....	
*Ex.15	DI-3B	8.00	0.30	0.60	0.18	6.44	1.16	0.00	1.04	0.12	0.05	0.02	4.01	....	1.42	0.083	0.29	90	5.50	....	
2	MOD. JB-1 W/DI-3C	6.00	0.13	0.82	0.11	6.44	0.69	0.04	0.73	0.00	Sag	0.02	....	5.54	1.42	0.083	0.33	100	5.50	....	
3	DI-3B	12.00	1.12	0.35	0.39	4.62	1.81	0.00	1.77	0.04	0.04	0.02	5.33	....	1.42	0.083	0.33	98	5.50	....	
4	DI-3B	8.00	0.19	0.48	0.09	6.44	0.59	0.00	0.59	0.00	0.03	0.03	2.39	....	1.42	0.083	0.27	100	5.50	....	
5	DI-3B	8.00	0.14	0.77	0.11	6.44	0.69	0.00	0.69	0.00	0.04	0.04	2.34	....	1.42	0.083	0.28	100	5.50	....	
7	MH	....	0.00	0.00	0.00	0.00	0.00	....	....	....	....	....	....	....	....	....	....	....	....	....	
8	DI-3B	8.00	0.09	0.78	0.07	6.44	0.45	0.00	0.45	0.00	0.05	0.04	1.66	....	1.42	0.083	0.25	100	5.50	....	
20	MH	....	0.00	0.00	0.00	0.00	0.00	....	....	....	....	....	....	....	....	....	....	....	....	....	
9	MH	....	0.00	0.00	0.00	0.00	0.00	....	....	....	....	....	....	....	....	....	....	....	....	....	
10	MH	....	0.00	0.00	0.00	0.00	0.00	....	....	....	....	....	....	....	....	....	....	....	....	....	
11	DI-3B	12.00	2.16	0.43	0.93	4.62	4.29	0.00	3.14	1.14	0.04	0.02	7.64	....	1.42	0.083	0.38	73	5.50	....	
12	DI-3B	12.00	1.81	0.45	0.81	4.91	4.00	0.00	2.96	1.05	0.05	0.02	7.17	....	1.42	0.083	0.37	74	5.50	....	
13	DI-12, Type II Grate	....	0.60	0.49	0.29	5.26	1.55	0.00	1.55	0.00	Sag	0.14	....	5.06	3.34	0.153	0.12	100	....	1.67	
1	ES-1	....	38.23	0.41	15.67	4.24	66.52	0.00	66.52	0.00	....	....	....	....	....	....	....	100	....	....	
5A	MH	....	0.00	0.00	0.00	0.00	0.00	....	....	....	....	....	....	....	....	....	....	....	....	....	
6	DI-2424	....	1.08	0.51	0.55	5.45	3.00	0.00	3	0.00	Sag	0.33	....	6.77	2	0.33	0.45	100	....	0.83	371.95
14	YI-2	2.00	0.22	0.44	0.10	6.44	0.62	0.00	0.62	0.00	Sag	0.14	....	1.60	....	0.138	0.22	100	6.00	....	383.42
15	DI-3B	6.00	0.07	0.90	0.06	6.44	0.41	0.00	0.41	0.00	0.03	0.02	2.11	....	1.42	0.083	0.26	100	5.50	....	
16	DI-12, Type II Grate	....	1.27	0.54	0.69	5.08	3.48	0.00	3.48	0.00	Sag	0.27	....	4.90	3.34	0.2	0.21	100	....	1.67	
17	DI-12, Type II Grate	....	1.76	0.46	0.81	4.62	3.74	0.00	3.74	0.00	Sag	0.12	....	6.96	3.34	0.2	0.22	100	....	1.67	
*Ex.9	DI-3B	8.00	0.28	0.66	0.18	5.67	1.05	0.13	1.05	0.12	0.05	0.02	4.05	....	1.42	0.083	0.3	90	5.50	....	
*Ex.10	MH	....	0.00	0.00	0.00	0.00	0.00	....	....	....	....	....	....	....	....	....	....	....	....	....	
*Ex.11	DI-3B	6.00	0.17	0.77	0.13	6.44	0.84	0.00	0.71	0.13	0.05	0.02	3.23	....	1.42	0.083	0.28	85	5.50	....	
*Ex.12	MH	....	0.00	0.00	0.00	0.00	0.00	....	....	....	....	....	....	....	....	....	....	....	....	....	
*Ex.13	MH	....	0.00	0.00	0.00	0.00	0.00	....	....	....	....	....	....	....	....	....	....	....	....	....	
*Ex.18	MH	....	0.00	0.00	0.00	0.00	0.00	....	....	....	....	....	....	....	....	....	....	....	....	....	
18	DI-3B	6.00	0.07	0.79	0.06	6.44	0.36	0.00	0.36	0.00	0.05	0.03	1.40	....	1.42	0.083	0.24	100	5.50	....	
19	YI-3	4.00	0.68	0.48	0.33	5.26	1.72	1.05	2.76	0.00	Sag	0.02	....	18.77	....	0.02	0.38	100	6.00	....	
*Ex.19	ES-1	....	0.18	0.36	0.06	6.44	0.42	0.00	0.42	0.00	....	....	....	....	....	....	....	100	....	....	

- GRATE INLETS, WHERE APPLICABLE, HAVE BEEN COMPUTED WITH A 50% CLOGGED CONDITION BY USING A COPMPUTATIONAL GRATE ARE OF HALF THE ACTUAL TOTAL GRATE AREA PROPOSED.

PIPE COMPUTATIONS

LineID	DrainageArea	RunoffCoeff	IncrCxA	TotalCxA	Inlet Time	Tc	Rainfall Intensity	KnownQ	Runoff Q	InvertUp	InvertDn	Length	Slope	Diameter	Capacity	Actual Flow Velocity	Full Flow Vel
	(ac)	(C)			(min)	(min)	(in/hr)	(cfs)	(cfs)	(ft)	(ft)	(ft)	(%)	(in)	(cfs)	(ft/s)	(ft/s)
*Ex.4-Ex.3	2.47	0.49	1.21	26.4	10	19.1	4.13	0	109.01	335.87	334.44	80.549	1.78	44	151.76	10.77	14.37
*Ex.5-Ex.4	2.7	0.35	0.95	25.19	14	19	4.14	0	104.26	338.46	336.1	186.231	1.27	44	128.22	11.18	12.14
*Ex.6-Ex.5	1.34	0.4	0.54	24.24	11	18.9	4.15	0	100.62	339.77	338.98	57.213	1.38	44	133.84	11.6	12.68
*Ex.7-Ex.6	0	0	0	23.71	0	18.7	4.16	0	98.7	341.26	339.97	63.105	2.04	44	162.85	10.81	15.42
*Ex.8-Ex.7	2.69	0.44	1.18	23.71	13	18.6	4.18	0	99.09	346.53	341.71	120.692	3.99	36	133.28	14.7	18.86
*Ex.15-Ex.8	0.3	0.6	0.18	20.87	6	18.4	4.2	0	87.71	351.86	347.02	158.596	3.05	36	116.51	13.58	16.48
*2-Ex.15	0.13	0.82	0.11	20.69	6	18.3	4.21	0	87.11	356.22	355.64	44.205	1.31	27(2b)	70.94	10.96	8.92
3-2	1.12	0.35	0.39	4.9	15	18	4.25	0	20.84	356.9	356.42	81.434	0.59	24 x 38	31.49	4.19	6.33
4-3	0.19	0.48	0.09	4.51	6	17.3	4.33	0	19.52	361.4	357.1	155.402	2.77	30	68.22	3.98	13.90
5-4	0.14	0.77	0.11	4.42	6	16.8	4.38	0	19.38	365.25	361.6	113.264	3.22	30	73.62	5.15	15.00
7-5	0	0	0	3.76	0	16.5	4.42	0	16.64	367.7	365.45	61.369	3.67	30	78.53	6.25	16.00
8-7	0.09	0.78	0.07	3.76	6	15.8	4.51	0	16.98	376.75	368.2	234.703	3.64	24	43.17	9.8	13.74
20-8	0	0	0	3.6	0	15.7	4.52	0	16.27	379.67	376.95	23.206	11.72	24	77.43	7.14	24.65
9-20	0	0	0	3.6	0	15.5	4.55	0	16.38	380.87	379.87	73.145	1.37	24	26.45	7.29	8.42
10-9	0	0	0	2.85	0	15.3	4.58	0	13.03	382.38	381.07	40.759	3.21	24	40.55	6.15	12.91
11-10	2.16	0.43	0.93	2.04	15	15	4.62	0	9.41	383.69	382.58	26.486	4.19	24	46.3	5.33	14.74
12-11	1.81	0.45	0.81	1.11	13	13	4.91	0	5.45	384.59	384.19	33.698	1.19	18	11.44	5.66	6.47
13-12	0.6	0.49	0.29	0.29	11	11	5.26	0	1.55	385.86	384.84	48.665	2.1	15	9.35	2.92	7.62
1-2	38.23	0.41	15.67	15.67	18	18	4.24	0	66.52	356.61	356.22	17.342	2.25	29 x 45	99.34	9.35	13.96
5A-5	0	0	0	0.55	0	10.2	5.42	0	2.99	366.6	366.5	8.261	1.21	15	7.11	4.9	
6-5A	1.08	0.51	0.55	0.55	10	10	5.45	0	3	367	366.8	19.13	1.05	15	6.6	4.76	5.38
14-8	0.22	0.44	0.1	0.1	6	6	6.44	0	0.62	377.7	377.5	18.969	1.05	15	6.63	1.74	5.40
15-9	0.07	0.9	0.06	0.06	6	6	6.44	0	0.41	383.17	381.62	49.478	3.13	15	11.43	1.46	9.31
16-9	1.27	0.54	0.69	0.69	12	12	5.08	0	3.48	383.5	381.37	38.769	5.49	18	24.61	3.57	13.93
17-10	1.76	0.46	0.81	0.81	15	15	4.62	0	3.74	384.25	382.88	37.612	3.64	18	20.04	4.12	11.34
*Ex.9-Ex.8	0.28	0.66	0.18	1.66	9	14.2	4.73	0	7.85	350.45	348.07	93.512	2.55	18	16.75	5.21	9.48
*Ex.10-Ex.9	0	0	0	1.48	0	13.9	4.77	0	7.04	355.18	350.9	108.446	3.95	15	12.83	8.52	10.45
*Ex.11-Ex.10	0.17	0.77	0.13	1.48	6	13.6	4.82	0	7.11	361.49	356.38	115.911	4.41	15	13.56	8.78	11.05
*Ex.12-Ex.11	0	0	0	1.34	0	13.2	4.88	0	6.56	365.04	362.11	131.126	2.23	15	9.65	7.26	7.86
*Ex.13-Ex.12	0	0	0	1.34	0	13.2	4.89	0	6.57	365.62	365.49	12.218	1.06	15	6.66	6.13	5.43
*Ex.18-Ex.13	0	0	0	0.45	0	12.1	5.05	0	2.26	370.97	365.72	113.489	4.63	15	13.89	3.09	11.32
18-Ex.18	0.07	0.79	0.06	0.45	6	11.8	5.11	0	2.28	372.15	371.17	34.883	2.81	15	10.82	5.32	8.82
19-18	0.68	0.48	0.33	0.33	11	11	5.26	0	1.72	373.05	372.35	69.869	1	15	6.46	4	5.26
Ex.19-18	0.18	0.36	0.06	0.06	6	6	6.44	0	0.42	375.04	373.37	35.938	4.65	12	7.68	3.85	9.78

*PIPE RUNS WITH AN ASTERISK HAVE BEEN INCLUDED HERE ONLY FOR PIPE CAPACITY COMPUTATIONS IN THE ULTIMATE CONDITION FOR THE DOWNSTREAM RUN. THESE RUNS ARE NOT TO BE CONSTRUCTED WITH THIS PLAN.

(2) MODIFIED JB-1 STRUCTURE PLAN VIEW

N.T.S.

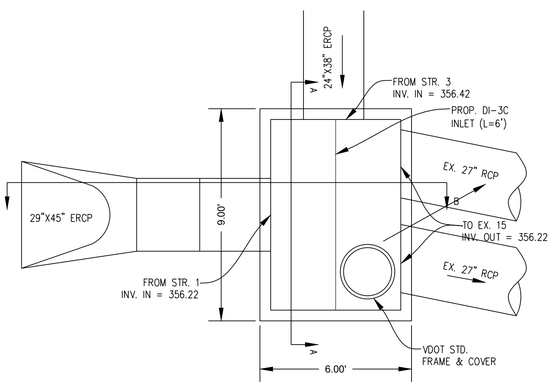

SECTION A-A

N.T.S.

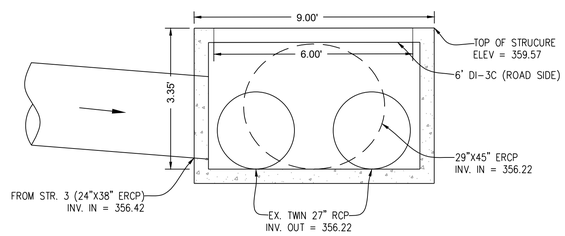

STORM STRUCTURE #2 (MODIFIED JB-1) NOTE:

CONTRACTOR SHALL FURNISH DETAILED SHOP DRAWINGS FOR THE FINAL STRUCTURAL DESIGN OF THE STRUCTURE IN IT'S ENTIRETY. SHOP DRAWINGS SHALL INCLUDE ALL STRUCTURAL INFORMATION, CONCRETE DESIGN, AND ADHERE TO THE CRITICAL DESIGN DIMENSIONS. DRAWINGS SHALL BE CERTIFIED BY A STRUCTURAL ENGINEER. SHOP DRAWINGS SHALL BE REVIEWED AND APPROVED PRIOR TO FABRICATION AND INSTALLATION.

SECTION B-B

SCALE: H: 1"=50' V: 1"=5'

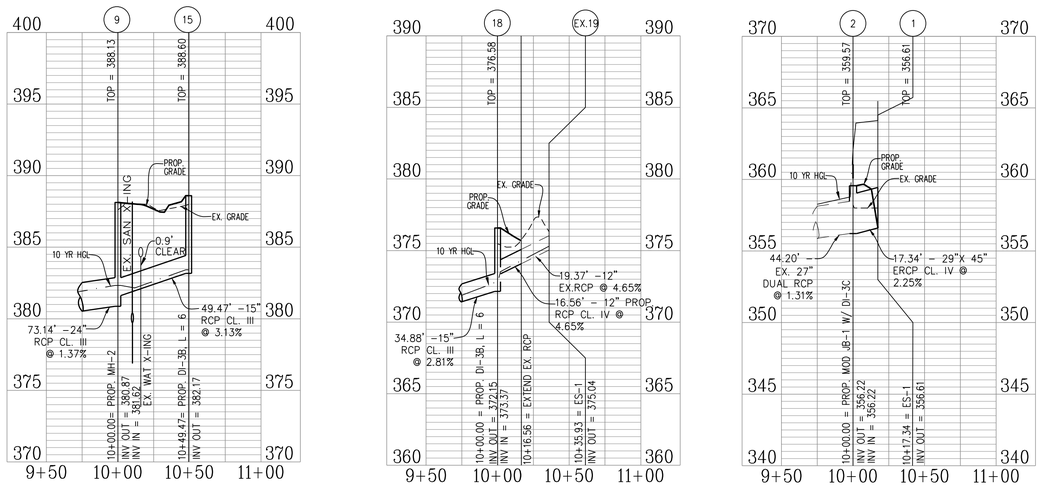

HGL COMPUTATIONS

InletID	Outlet WSE	Do	Qo	Lo	Sfo	Vo	Qi	Vi	Hi	Angle	MinorLoss	Final H	HGLJnct	Inlet WSE	Rim Elev
	(ft)	(in)	(cfs)	(ft)	(%)	(ft)	(cfs)	(ft/s)	(ft)	(Deg)	(ft)	(ft)	(ft)	(ft)	(ft)
* Ex.4	338.10	44.00	109.01	80.55	0.00	1.96	6.60	11.22	1.96	46.54	2.66	3.18	339.05	339.05	346.77
* Ex.5	339.05	44.00	104.26	186.23	0.00	1.84	4.50	10.89	1.84	-62.41	n/a	3.12	341.58	341.58	343.73
* Ex.6	341.58	44.00	100.62	57.21	0.00	1.76	2.82	10.64	1.76	-0.88	n/a	3.08	342.85	342.85	346.57
* Ex.7	342.85	44.00	98.70	63.11	0.00	1.72	0.00	10.51	1.72	-29.29	1.48	3.05	344.31	344.31	349.16
* Ex.8	344.31	36.00	99.09	120.69	0.00	3.13	5.81	14.18	3.13	56.24	n/a	2.89	349.42	349.42	352.37
* Ex.15	349.42	36.00	87.71	158.60	0.00	2.50	1.16	12.69	2.50	-62.33	n/a	2.83	354.69	354.69	359.44
2	357.89	27(2b)	87.11	44.21	1.98	1.87	0.69	10.95	1.87	32.98	3.23	5.77	361.99	358.77	359.57
3	363.86	24 x 38	20.84	81.43	0.26	0.27	1.81	4.19	0.27	63.26	0.14	7.31	364.21	364.07	360.65
4	364.21	30.00	19.52	155.40	0.23	0.25	0.59	3.98	0.25	-0.34	0.12	3.28	364.68	364.56	368.05
5	364.68	30.00	19.38	113.26	0.22	0.24	0.69	6.34	0.63	-8.94	n/a	1.49	366.74	366.74	371.78
7	366.74	30.00	16.64	61.37	0.00	0.56	0.00	6.00	0.56	-15.59	0.13	1.38	369.08	369.08	374.33
8	369.08	24.00	16.98	234.70	0.00	0.72	0.45	6.79	0.72	-11.31	1.05	1.48	378.23	378.23	384.30
20	378.23	24.00	16.27	23.21	0.00	0.69	0.00	6.65	0.69	7.64	n/a	1.45	381.12	381.12	385.47
9	381.12	24.00	16.38	73.15	0.00	0.69	0.00	6.67	0.69	30.59	0.69	1.46	382.33	382.33	388.57
10	382.33	24.00	13.03	40.76	0.00	0.57	0.00	6.04	0.57	-9.65	n/a	1.30	383.68	383.68	390.71
11	383.68	24.00	9.41	26.49	0.00	0.44	4.29	5.34	0.44	4.06	n/a	1.10	384.79	384.79	391.60
12	384.92	18.00	5.45	33.70	0.00	0.38	4.00	4.93	0.38	92.98	n/a	0.90	385.49	385.49	390.97
13	385.49	15.00	1.55	48.67	0.00	0.18	1.55	3.44	0.18	25.66	n/a	0.49	386.35	386.35	389.47
1	363.86	29 x 45	66.52	17.34	1.01	1.36	66.52	9.35	1.36	-27.08	n/a	8.78	365.39	364.03	356.61
5A	367.07	15.00	2.99	8.26	0.00	0.28	0.00	4.27	0.28	-91.97	0.27	0.69	367.29	367.29	372.06
6	367.39	15.00	3.00	19.13	0.00	0.28	3.00	4.28	0.28	67.63	n/a	0.70	367.70	367.70	371.50
14	378.23	15.00	0.62	18.97	0.00	0.11	0.62	2.65	0.11	-78.28	n/a	0.31	378.01	378.01	383.20
15	382.33	15.00	0.41	49.48	0.00	0.09	0.41	2.36	0.09	78.53	n/a	0.25	383.42	383.42	388.60
16	382.33	18.00	3.48	38.77	0.00	0.28	3.48	4.22	0.28	-82.15	n/a	0.71	384.21	384.21	389.10
17	383.68	18.00	3.74	37.61	0.00	0.29	3.74	4.32	0.29	-73.28	n/a	0.74	384.99	384.99	390.70
* Ex.9	349.42	18.00	7.85	93.51	0.00	0.51	1.05	5.74	0.51	-8.20	n/a	1.08	351.53	351.53	356.00
* Ex.10	351.56	15.00	7.04	108.45	0.00	0.62	0.00	6.34	0.62	52.62	n/a	1.06	356.24	356.24	358.50
* Ex.11	357.02	15.00	7.11	115.91	0.00	0.63	0.84	6.38	0.63	-103.37	0.95	1.07	362.56	362.56	365.91
* Ex.12	362.87	15.00	6.56	131.13	0.00	0.57	0.00	6.06	0.57	90.69	n/a	1.03	366.07	366.07	370.70
* Ex.13	366.50	15.00	6.57	12.22	0.00	0.57	0.00	6.07	0.57	-20.24	0.52	1.03	366.65	366.65	370.82
* Ex.18	366.65	15.00	2.26	113.49	0.00	0.23	0.00	3.88	0.23	5.47	n/a	0.60	371.57	371.57	375.45
18	371.57	15.00	2.28	34.88	0.00	0.24	0.36	3.89	0.24	-35.90	0.35	0.60	372.75	372.75	376.58
19	372.79	15.00	1.72	69.87	0.00	0.20	1.72	3.56	0.20	30.01	n/a	0.52	373.57	373.57	378.10
* Ex.19	373.53	12.00	0.42	35.94	0.00	0.10	0.42	2.48	0.10	77.10	0.10	0.27	375.31	375.31	376.30

NOTE: PIPE RUN 2 - EX. 15 IS NOT ADEQUATE. UPGRADE NOT IN PROJECT SCOPE. FUTURE IMPROVEMENT RECOMMENDED.

* EXISTING PIPE RUNS WITH AN ASTERISK HAVE BEEN INCLUDED HEREIN ONLY FOR PIPE CAPACITY COMPUTATIONS

No.	DATE	DESCRIPTION
4	02/19/25	100% PLAN
3	10/18/24	95% REVISION
2	08/02/24	95% PLAN
2	06/25/24	95% DRAFT
1	10/09/18	REVISION PER TOWN OF VIENNA COMMENTS

REVISIONS

PLAN DATE
02-21-2018
04-18-2018
08-13-2018
10-09-2018
06-25-2024
08-02-2024
10-18-2024
02-19-2025

Urban, Ltd.
7712 Little River Turnpike
Annandale, Virginia 22003
Tel. 703.642.8830
Fax. 703.642.8251
www.urban-ltd.com
Planners·Engineers·Landscape Architects·Land Surveyors

COMMONWEALTH OF VIRGINIA
C. RYAN CONNOR
Lic. No.039531
02/19/2025
PROFESSIONAL ENGINEER

STORM SEWER PROFILES & COMPUTATIONS

ROADWAY AND DRAINAGE IMPROVEMENT PLAN
GLYNDON STREET, N.E.

TOWN OF VIENNA
FAIRFAX COUNTY, VIRGINIA

SCALE: NTS
C.I. N/A
DATE: AUG. 2018

SHEET 9 OF 15

FILE No. PP-2156

VERTICAL AVAILABLE TO MEET REQUIRED DEPTH

SD-3

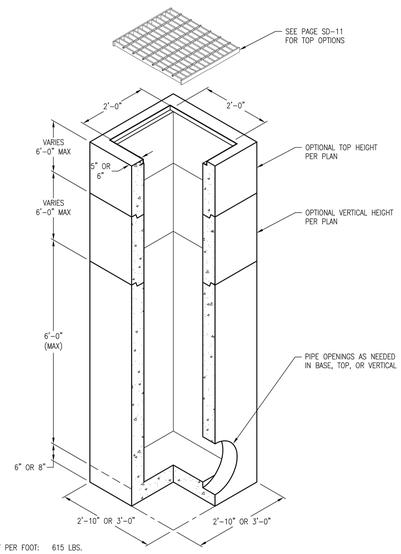

5" WALL VERTICAL WEIGHT PER FOOT:	615 LBS.
6" FLOOR WEIGHT:	610 LBS.
6" WALL VERTICAL WEIGHT PER FOOT:	765 LBS.
8" FLOOR WEIGHT:	920 LBS.

DRAWING MAY NOT CONFORM TO THE MOST CURRENT SPECIFICATION

Oldcastle Precast®
Northern California
Madera • Morgan Hill • Pleasanton • Santa Rosa • Stockton • Tulare
Phone: 925-750-6650 Fax: 925-750-6660

DI-2424
FILE NAME: SD-3.DWG
REVISED: MARCH 2016
www.oldcastleprecast.com

2'-0" X 2'-0" X VARIES (I.D.)
DRAINAGE INLET
STORM DRAIN

SD-11

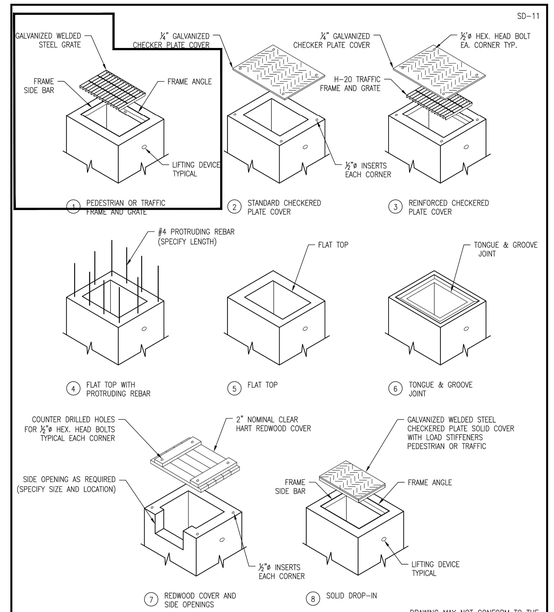

DRAWING MAY NOT CONFORM TO THE MOST CURRENT SPECIFICATION

Oldcastle Precast®
Northern California
Madera • Morgan Hill • Pleasanton • Santa Rosa • Stockton • Tulare
Phone: 925-750-6650 Fax: 925-750-6660

VARIOUS TOPS
FILE NAME: SD-11.DWG
REVISED: MARCH 2016
www.oldcastleprecast.com

VARIOUS TOPS OPTIONS
DRAINAGE INLET
STORM DRAIN

FAIRFAX COUNTY PUBLIC FACILITIES MANUAL

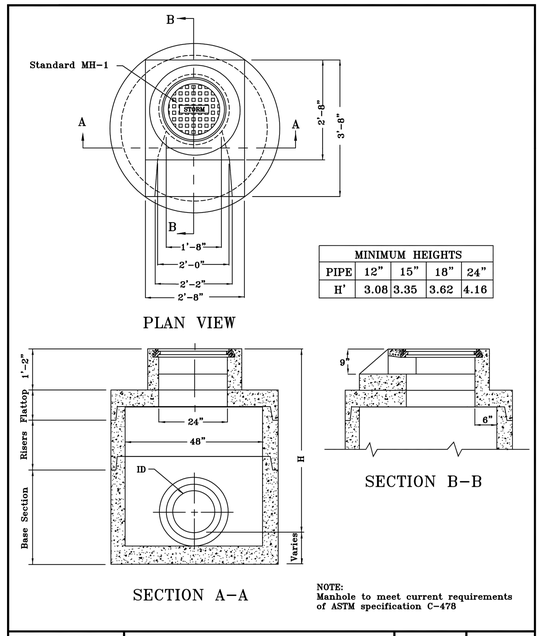

MINIMUM HEIGHTS				
PIPE	12"	15"	18"	24"
H'	3.08	3.35	3.62	4.16

NOTE:
Manhole to meet current requirements of ASTM specification C-478

Ref. Sec. 6-1103.4

Rev. 1-00, 11-05, 2011
Reprint, 2018 Reprint

MODIFIED YARD INLET
(SINGLE THROAT)

PLATE NO.	STD. NO.
56-6	YI-2

SD-12

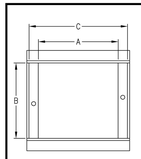

FRAME PLAN VIEW

PEDESTRIAN (NON-TRAFFIC) FRAMES				
	FRAME SIZE			FRAME HEIGHT
SIZE	A	B	C	
12x12	12 3/8"	12 3/8"	15"	1 1/2"
18x18	18 3/4"	18 3/8"	21"	1 1/8"
18x24	18 3/4"	24 3/8"	21"	1 1/4"
24x24	24 3/8"	24 3/8"	27"	1 1/2"
24x30	24 3/8"	30 3/4"	27"	1 1/2"
24x36	24 3/8"	36 3/8"	27"	1 1/2"
24x48	24 3/8"	48 3/8"	27"	1 1/2"
30x30	30 3/8"	30 3/8"	33"	1 1/2"
36x36	36 3/8"	36 1/2"	39 1/2"	1 3/4"
36x48	36 1/2"	48 3/8"	39 5/8"	1 3/4"
48x48	48 3/8"	48 3/8"	51"	2"

TRAFFIC FRAMES				
	FRAME SIZE			FRAME HEIGHT
SIZE	A	B	C	
12x12	12 3/8"	12 3/8"	15"	1 1/2"
18x18	18 3/8"	18 3/8"	21"	2 1/2"
18x24	18 3/8"	24 3/8"	21"	2 1/2"
24x24	24 3/8"	24 3/8"	27"	2 1/2"
24x30	24 1/2"	30 3/4"	27 1/8"	2 1/2"
24x36	24 1/2"	36 3/8"	27 1/8"	2 1/2"
24x48	24 3/8"	48 1/2"	27"	2 1/2"
30x30	30 3/8"	30 3/4"	34 3/8"	3 1/4"
36x36	36 3/8"	36 5/8"	40 1/2"	3 3/4"
36x48	36 5/8"	48 3/8"	40 1/8"	3 3/4"
48x48	48 1/2"	48 1/2"	52 1/2"	4 1/2"

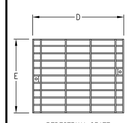

PEDESTRIAN GRATE PLAN VIEW

PEDESTRIAN (NON-TRAFFIC), BICYCLE-PROOF GRATES					
	GRATE SIZE		GRATE HEIGHT	WEIGHTS (LBS)	
SIZE	D	E		FRAME	GRATE
12x12	14 7/8"	12 5/8"	1 1/4"	9	13
18x18	20 5/8"	18"	1"	7	20
18x24	20 5/8"	24"	1 1/4"	18	35
24x24	26 3/4"	24"	1 1/4"	16	44
24x30	26 3/4"	30"	1 1/4"	19	54
24x36	26 3/4"	36"	1 1/4"	19	65
24x48	26 1/2"	48"	1 1/4"	23	87
30x30	31 5/8"	30"	1 1/4"	19	66
36x36	39"	36"	1 1/2"	38	111
36x48	39"	48"	1 1/2"	31	145
48x48	50"	48"	1 3/4"	35	230

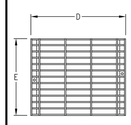

TRAFFIC GRATE PLAN VIEW

TRAFFIC, BICYCLE-PROOF GRATES					
	GRATE SIZE		GRATE HEIGHT	WEIGHTS (LBS)	
SIZE	D	E		FRAME	GRATE
12x12	14 5/8"	11 7/8"	1 3/4"	9	27
18x18	20 5/8"	18"	2 1/4"	16	45
18x24	20 5/8"	24"	2 1/4"	23	60
24x24	26 3/4"	24"	2 1/4"	21	76
24x30	26 3/4"	30"	2 1/4"	24	94
24x36	26 1/2"	36"	2 1/4"	26	137
24x48	26 5/8"	48"	2 1/4"	31	145
30x30	34"	30"	3"	43	139
36x36	40"	36"	3 1/2"	62	219
36x48	40"	23 5/8"	3 1/2"	84	282
48x48	52 7/8"	23 7/8"	4"	93	524

NOTES:
1. FRAME AND GRATES ARE HOT-DIPPED GALVANIZED AFTER FABRICATION.
2. ADDITIONAL SIZES AVAILABLE UPON REQUEST
3. LOCKING BOLTS INCLUDED

DRAWING MAY NOT CONFORM TO THE MOST CURRENT SPECIFICATION

Oldcastle Precast®
Northern California
Madera • Morgan Hill • Pleasanton • Santa Rosa • Stockton • Tulare
Phone: 925-750-6650 Fax: 925-750-6660

PEDESTRIAN & TRAFFIC
FILE NAME: SD-12.DWG
REVISED: MARCH 2016
www.oldcastleprecast.com

TYPICAL FRAME & GRATES
DRAINAGE INLET
STORM DRAIN

FAIRFAX COUNTY PUBLIC FACILITIES MANUAL

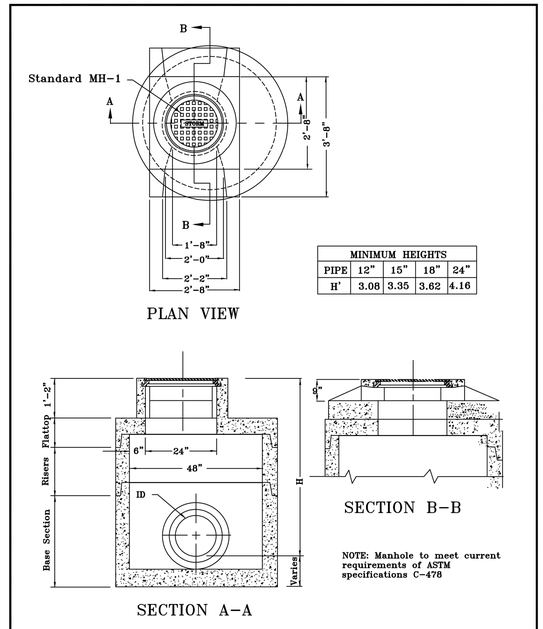

MINIMUM HEIGHTS				
PIPE	12"	15"	18"	24"
H'	3.08	3.35	3.62	4.16

NOTE: Manhole to meet current requirements of ASTM specifications C-478

Ref. Sec. 6-1103.4

Rev. 1-00, 11-05, 2011
Reprint, 2018 Reprint

MODIFIED YARD INLET
(DOUBLE THROAT)

PLATE NO.	STD. NO.
58-6	YI-3

No.	DATE	DESCRIPTION
4	02/19/25	100% PLAN
3	10/18/24	95% REVISION
2	08/02/24	95% PLAN
2	06/25/24	95% DRAFT
1	10/09/18	REVISION PER TOWN OF VIENNA COMMENTS

REVISIONS

PLAN DATE
02-21-2018
04-18-2018
08-13-2018
10-09-2018
06-25-2024
08-02-2024
10-18-2024
02-19-2025

Urban, Ltd.
7712 Little River Turnpike
Annandale, Virginia 22003
Tel. 703.642.0700
Fax. 703.642.8351
www.urban-ltd.com
Planners · Engineers · Landscape Architects · Land Surveyors

COMMONWEALTH OF VIRGINIA
C. RYAN CONNOR
Lic. No.039531
02/19/2025
PROFESSIONAL ENGINEER

STORM SEWER COMPUTATIONS & DETAILS

ROADWAY AND DRAINAGE IMPROVEMENT PLAN
GLYNDON STREET, N.E.

TOWN OF VIENNA
FAIRFAX COUNTY, VIRGINIA

DATE: AUG. 2018
SCALE: NTS
C.I. N/A

SHEET 9A OF 15

FILE No. PP-2156

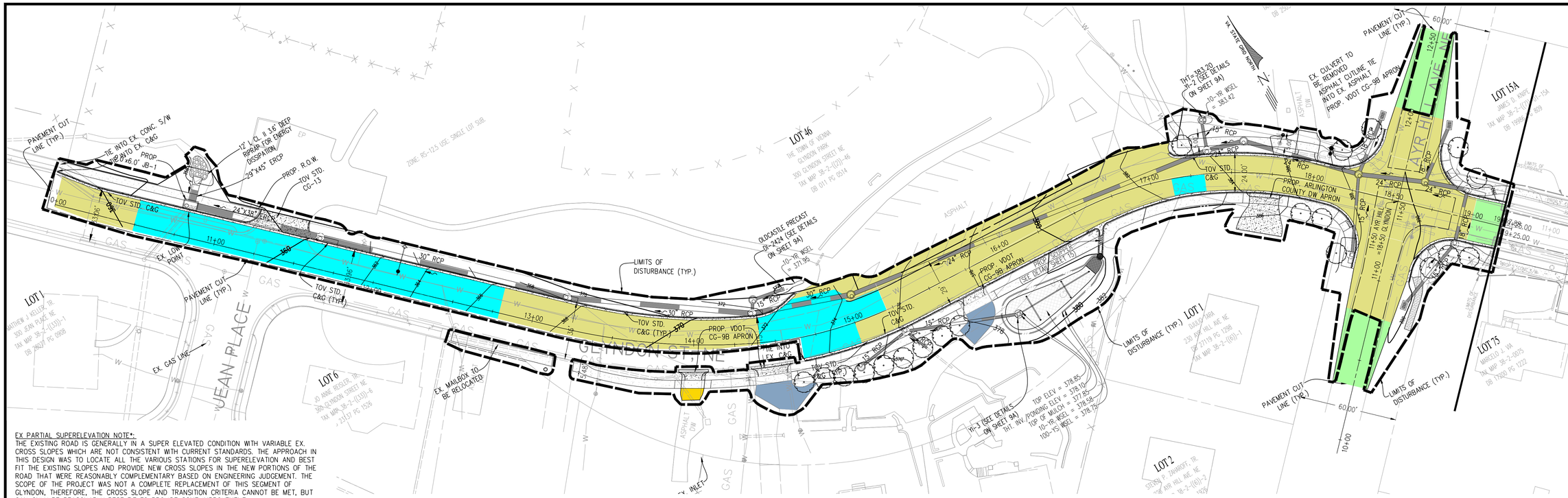

EX PARTIAL SUPERELEVATION NOTE*:
THE EXISTING ROAD IS GENERALLY IN A SUPER ELEVATED CONDITION WITH VARIABLE EX. CROSS SLOPES WHICH ARE NOT CONSISTENT WITH CURRENT STANDARDS. THE APPROACH IN THIS DESIGN WAS TO LOCATE ALL THE VARIOUS STATIONS FOR SUPERELEVATION AND BEST FIT THE EXISTING SLOPES AND PROVIDE NEW CROSS SLOPES IN THE NEW PORTIONS OF THE ROAD THAT WERE REASONABLY COMPLEMENTARY BASED ON ENGINEERING JUDGEMENT. THE SCOPE OF THE PROJECT WAS NOT A COMPLETE REPLACEMENT OF THIS SEGMENT OF GLYNDON, THEREFORE, THE CROSS SLOPE AND TRANSITION CRITERIA CANNOT BE MET, BUT CAN ONLY BE REASONABLY BEST FIT TO PROVIDE SOME IMPROVEMENT.

GLYNDON ST, NE ROAD DESIGN TABLE (NORTH BOUND)

Description	ROADWAY CL Station	Ex Crown Elev	Ex. EP Width from Ex. Crown	Ex. EP Elevation	Prop. EP Width from Ex. EP	Ex. X-Slope from Ex. Crown	Ex. Crown Longitude Slope	Prop. EP Width from Ex. Crown	New Slope Ex. Crown to EP	Prop. X-Slope	Prop. EP Elevation	Prop. EP Longitude Slope	Prop. TC Elevation (Ex. TC if curb exists)	Dist from TC to Front of S/W	Prop. Front of S/W Elevation	Prop. Back of S/W Elevation
Normal Crown	1000.00	361.26	18.37	360.83	0.96	-2.34%	-5.65%	19.33	-2.08%	-2.08%	360.86	-5.54%	361.24	3.12	361.30	361.39
Normal Crown	1025.00	360.41	11.67	360.15	6.39	-2.23%	-3.40%	18.06	-2.08%	-2.08%	360.03	-3.29%	360.42	5.00	360.52	360.61
Normal Crown	1050.00	359.85	12.84	359.62	6.37	-1.79%	-2.24%	19.21	-2.08%	-2.08%	359.45	-2.34%	359.83	5.00	359.94	360.02
Normal Crown	1075.00	359.57	12.53	359.40	6.59	-1.36%	-1.12%	19.12	-2.08%	-2.08%	359.17	-1.11%	359.55	5.00	359.66	359.75
Normal Crown	1100.00	359.60	12.46	359.54	6.61	-0.48%	0.12%	19.07	-1.75%	-1.75%	359.27	0.38%	359.65	5.00	359.75	359.86
Normal Crown	1125.00	359.87	12.18	359.93	6.79	0.49%	1.08%	18.97	-2.08%	-2.08%	359.48	0.84%	N/A	N/A	N/A	N/A
Normal Crown	1150.00	360.30	12.00	360.43	6.92	1.08%	1.72%	18.92	-2.08%	-2.08%	359.91	1.72%	N/A	N/A	N/A	N/A
Normal Crown	1175.00	361.05	11.68	361.15	7.09	0.86%	3.00%	18.77	-2.08%	-2.08%	360.66	3.01%	361.04	N/A	N/A	N/A
Normal Crown	1200.00	362.33	11.43	362.35	7.56	0.17%	5.12%	18.99	-2.08%	-2.08%	361.94	5.10%	362.32	N/A	N/A	N/A
Normal Crown	1225.00	364.07	11.39	363.98	7.78	-0.79%	6.96%	19.17	-2.08%	-2.08%	363.67	6.95%	364.05	N/A	N/A	N/A
Normal Crown	1250.00	365.67	11.47	365.50	7.87	-1.48%	6.40%	19.34	-2.08%	-2.08%	365.27	6.39%	365.65	N/A	N/A	N/A
Normal Crown	1275.00	366.56	11.58	366.34	7.90	-1.90%	3.56%	19.48	-2.08%	-2.08%	366.15	3.55%	366.54	N/A	N/A	N/A
Level Crown	1300.00	367.52	11.47	367.17	8.12	-3.05%	3.84%	19.59	-2.08%	-2.08%	367.11	3.83%	367.49	N/A	N/A	N/A
Reverse Crown	1325.00	368.48	11.03	368.04	8.23	-3.99%	3.84%	19.26	-3.00%	-3.00%	367.90	3.16%	368.28	N/A	N/A	N/A
Transition to Full Super Elevation	1350.00	369.37	11.20	368.89	7.90	-4.29%	3.56%	19.10	-3.70%	-3.70%	368.66	3.04%	369.04	N/A	N/A	N/A
Begin Full Super Elevation	1366.06	369.85	11.05	369.26	7.65	-5.34%	2.99%	18.70	-4.00%	-4.00%	369.10	2.73%	369.48	N/A	N/A	N/A
Full Super Elevation	1375.00	370.12	11.30	369.48	7.51	-5.66%	3.02%	18.81	-4.00%	-4.00%	369.37	2.97%	369.75	N/A	N/A	N/A
Full Super Elevation	1400.00	370.78	11.40	370.16	6.50	-5.44%	2.64%	17.90	-4.00%	-4.00%	370.06	2.79%	370.45	N/A	N/A	N/A
Full Super Elevation	1425.00	371.62	12.42	371.01	4.40	-4.91%	3.36%	16.82	-4.00%	-4.00%	370.95	3.53%	371.33	N/A	N/A	N/A
Full Super Elevation	1450.00	372.56	12.69	372.12	4.21	-3.47%	3.76%	16.90	-4.00%	-4.00%	371.88	3.75%	372.27	N/A	N/A	N/A
Full Super Elevation	1464.66	373.39	13.25	372.89	N/A	-3.77%	5.66%	N/A	-4.00%	-4.00%	N/A	N/A	N/A	N/A	N/A	N/A
Full Super Elevation	1475.00	373.59	13.17	373.12	N/A	-3.57%	1.93%	N/A	-4.00%	-4.00%	N/A	N/A	N/A	N/A	N/A	N/A
Full Super Elevation	1500.00	374.64	13.76	374.15	-0.48	-3.56%	4.20%	13.28	-4.00%	-4.00%	374.11	4.45%	N/A	N/A	N/A	N/A
End Full Super Elevation	1510.27	374.98	13.70	374.61	-1.02	-2.70%	3.31%	12.68	-4.00%	-4.00%	374.47	3.54%	N/A	N/A	N/A	N/A
Transition to Reverse Crown	1525.00	375.80	13.95	375.18	-0.94	-4.44%	5.57%	13.01	-3.00%	-3.00%	375.41	6.36%	N/A	N/A	N/A	N/A
Reverse Crown	1550.00	376.88	13.42	376.28	0.00	-4.47%	4.32%	13.42	-2.08%	-2.08%	376.60	4.76%	N/A	N/A	N/A	N/A
Transition to Level Crown on Right	1575.00	377.92	12.97	377.43	0.11	-3.78%	4.16%	13.08	-2.44%	-2.44%	377.60	4.00%	N/A	N/A	N/A	N/A
Transition to Level Crown on Left	1600.00	378.90	12.51	378.53	-0.17	-2.96%	3.92%	12.34	-1.62%	-1.62%	378.70	4.40%	N/A	N/A	N/A	N/A
Reverse Crown on Left	1625.00	379.92	12.54	379.60	-0.57	-2.55%	4.08%	11.97	-0.42%	-0.42%	379.87	4.68%	N/A	N/A	N/A	N/A
Reverse Crown on Left	1650.00	380.82	13.15	380.58	-0.81	-1.83%	3.60%	12.34	-0.65%	-0.65%	380.74	3.48%	N/A	N/A	N/A	N/A
Transition to Full Super Elevation	1675.00	381.60	13.35	381.53	1.29	-0.52%	3.12%	14.64	0.23%	0.23%	381.63	3.58%	N/A	N/A	N/A	N/A
Begin Full Super Elevation	1686.57	381.90	13.20	381.93	0.00	0.23%	2.59%	13.20	4.00%	4.00%	382.43	6.87%	N/A	N/A	N/A	N/A
Full Super Elevation	1700.00	382.25	12.76	382.42	0.00	1.33%	2.61%	12.76	4.00%	4.00%	382.76	2.48%	N/A	N/A	N/A	N/A
Full Super Elevation	1725.00	383.03	12.05	383.35	-1.40	2.66%	3.12%	10.65	4.00%	4.00%	383.46	2.78%	383.84	10.12	384.05	384.15
Full Super Elevation	1750.00	384.13	10.85	384.39	0.48	2.40%	4.40%	11.33	4.00%	4.00%	384.58	4.51%	384.96	5.00	385.07	385.17
End Full Super Elevation	1769.51	385.12	11.10	385.12	0.85	0.00%	5.07%	11.95	4.00%	4.00%	385.60	5.20%	385.98	5.00	386.08	386.19
Transition to Reverse Crown	1775.00	385.41	11.09	385.60	0.91	1.71%	5.28%	12.00	3.00%	3.00%	385.77	3.13%	386.15	5.00	386.26	386.36
Reverse Crown	1800.00	386.63	10.76	386.57	0.71	-0.56%	4.88%	11.47	2.08%	2.08%	386.87	4.39%	387.25	5.00	387.35	387.46
Transition to Level Crown on Left	1825.00	388.07	10.71	387.74	N/A	-3.08%	5.76%	N/A	N/A	N/A	N/A	N/A	N/A	N/A	N/A	N/A
Level Crown on Left	1853.60	389.79	11.00	389.85	N/A	0.55%	6.01%	N/A	N/A	N/A	N/A	N/A	N/A	N/A	N/A	N/A
Transition to Normal Crown	1875.00	390.30	12.76	390.14	N/A	-1.25%	2.38%	N/A	N/A	N/A	N/A	N/A	N/A	N/A	N/A	N/A
Normal Crown	1900.00	391.40	10.90	391.19	0.98	-1.93%	4.40%	11.88	-1.93%	-1.93%	391.17	4.30%	391.55	0.62	391.57	391.67
Normal Crown	1917.88	392.10	12.24	391.88	0.00	-1.80%	3.91%	12.24	-1.80%	-1.80%	391.88	3.97%	392.26	5.00	392.37	392.47

Notes:
Note: (-) sign indicate downward slope

GLYNDON ST, NE ROAD DESIGN TABLE (SOUTH BOUND)

ROADWAY CL Station	Ex Crown Elev	Ex. EP Width from Ex. Crown	Ex. EP Elevation	Prop. EP Width from Ex. EP	Ex. X-Slope from Ex. Crown	Ex. Crown Longitude Slope	Prop. EP Width from Ex. Crown	New Slope Ex. Crown to EP	Prop. X-Slope	Prop. EP Elevation	Prop. EP Longitude Slope	Prop. TC Elevation (Ex. TC if curb exists)	Dist from TC to Front of S/W	Prop. Front of S/W Elevation	Prop. Back of S/W Elevation
1000.00	361.26	14.00	360.54	N/A	-5.14%	-5.65%	N/A	N/A	No Improvements made from station 1000.00 to 1250.00. Existing road, curb and gutter and sidewalk remains						
1025.00	360.41	12.39	359.62	N/A	-6.38%	-3.40%	N/A	N/A							
1050.00	359.85	11.24	359.06	N/A	-7.03%	-2.24%	N/A	N/A							
1075.00	359.57	12.10	358.94	N/A	-5.21%	-1.12%	N/A	N/A							
1100.00	359.60	11.67	359.30	N/A	-2.57%	0.12%	N/A	N/A							
1125.00	359.87	11.78	359.66	N/A	-1.78%	1.08%	N/A	N/A							
1150.00	360.30	12.33	360.01	N/A	-2.35%	1.72%	N/A	N/A							
1175.00	361.05	12.24	360.61	N/A	-3.59%	3.00%	N/A	N/A							
1200.00	362.33	12.17	362.02	N/A	-2.55%	5.12%	N/A	N/A							
1225.00	364.07	12.01	363.63	N/A	-3.66%	6.96%	N/A	N/A							
1250.00	365.67	12.03	365.24	N/A	-3.57%	6.40%	N/A	N/A							
1275.00	366.56	12.17	366.46	N/A	-0.82%	3.56%	N/A	N/A	N/A	N/A	N/A	N/A	N/A	366.47	366.59
1300.00	367.52	12.32	367.53	N/A	0.08%	3.84%	N/A	N/A	N/A	N/A	N/A	367.76	0.00	367.76	367.86
1325.00	368.48	12.82	368.53	N/A	0.39%	3.84%	N/A	N/A	N/A	N/A	N/A	368.92	0.00	368.92	369.02
1350.00	369.37	12.65	369.41	N/A	0.32%	3.56%	N/A	N/A	N/A	N/A	N/A	369.77	3.80	369.85	369.95
1366.06	369.85	12.60	369.85	N/A	0.00%	2.99%	N/A	N/A	N/A	N/A	N/A	370.17	5.18	370.28	370.38
1375.00	370.12	12.20	370.08	N/A	-0.33%	3.02%	N/A	N/A	N/A	N/A	N/A	370.38	5.21	370.49	370.59
1400.00	370.78	12.40	370.81	N/A	0.24%	2.64%	N/A	N/A	N/A	N/A	N/A	N/A	N/A	371.16	371.26
1425.00	371.62	12.77	371.63	N/A	0.08%	3.36%	N/A	N/A	N/A	N/A	N/A	371.51	5.00	371.61	371.72
1450.00	372.56	13.37	372.62	N/A	0.45%	3.76%	N/A	N/A	N/A	N/A	N/A	N/A	N/A	372.90	373.00
1465.33	373.39	13.32	373.34	0.00	-0.38%	5.41%	13.32	-0.38%	-0.38%	373.34	4.40%	373.72	5.00	372.90	373.00
1475.00	373.59	12.83	373.82	0.76	1.79%	2.07%	13.59	1.50%	1.50%	373.79	4.70%	374.18	5.00	374.28	374.38
1500.00	374.64	12.42	374.98	1.16	2.74%	4.20%	13.58	3.00%	3.00%	375.05	5.01%	375.43	5.00	375.53	375.64
1510.27	374.98	12.71	375.35	0.80	2.91%	3.31%	13.51	4.00%	4.00%	375.52	4.61%	375.90	5.00	376.01	376.11
1525.00	375.80	12.70	375.88	0.44	0.63%	5.57%	13.14	3.00%	3.00%	376.19	4.57%	376.58	5.00	376.68	376.78
1550.00	376.88	11.81	376.94	0.94	0.51%	4.32%	12.75	2.08%	2.08%	377.15	3.80%	377.53	5.00	377.63	377.73
1575.00	377.92	11.31	377.82	1.77	-0.88%	4.16%	13.08	0.00%	0.00%	377.92	3.10%	378.30	5.00	378.41	378.51
1600.00	378.90	11.22	378.71	2.61	-1.69%	3.92%	13.83	-1.00%	-1.00%	378.76	3.37%	379.14	5.00	379.25	379.35
1625.00	379.92	10.53	379.49	3.66	-4.08%	4.08%	14.19	-2.08%	-2.08%	379.62	3.45%	380.01	5.00	380.11	380.21
1650.00	380.82	10.37	380.27	3.45	-5.30%	3.60%	13.82	-3.00%	-3.00%	380.41	3.12%	380.79	5.00	380.89	381.00
1675.00	381.60	11.77	380.98	0.91	-5.27%	3.12%	12.68	-3.70%	-3.70%	381.13	2.90%	381.51	0.00	381.51	381.62
1686.57	381.90	11.45	381.32	0.90	-5.07%	2.59%	12.35	-4.00%	-4.00%	381.41	2.38%	381.79	0.00	381.79	381.89
1700.00	382.25	10.82	381.67	0.92	-5.36%	2.61%	11.74	-4.00%	-4.00%	381.78	2.79%	382.16	1.50	382.19	382.30
1725.00	383.03	10.67	382.74	0.15	-2.72%	3.12%	10.82	-4.00%	-4.00%	382.60	3.27%	382.98	0.58	382.99	383.09
1750.00	384.13	10.21	383.46	-0.38	-6.56%	4.40%	9.83	-4.00%	-4.00%	383.74	4.56%	384.12	0.58	384.13	384.23
1769.51	385.12	9.21	384.48	1.01	-6.95%	5.07%	10.22	-4.00%	-4.00%	384.71	4.99%	385.09	0.58	385.10	385.21
1775.00	385.41	10.36	384.79	-1.21	-5.98%	5.28%	9.15	-3.00%	-3.00%	385.14	7.73%	385.52	0.58	385.53	385.63
1800.00	386.63	10.59	386.11	-0.90	-4.91%	4.88%	9.69	-2.08%	-2.08%	386.43	5.17%	386.81	0.58	386.82	386.93
1825.00	388.07	10.43	387.72	N/A	-3.36%	5.76%	N/A	N/A	N/A	N/A	N/A	N/A	N/A	N/A	N/A
1853.60	389.79	11.00	389.50	N/A	-2.64%	6.01%	N/A	N/A	N/A	N/A	N/A	N/A	N/A	N/A	N/A
1875.00	390.30	11.04	389.75	N/A	-4.98%	2.38%	N/A	N/A	N/A	N/A	N/A	N/A	N/A	N/A	N/A
1900.00	391.40	10.55	390.86	3.57	-5.12%	3.47%	14.12	-5.12%	-5.12%	390.68	4.25%	391.06	0.58	391.07	391.17
1917.88	392.10	13.93	391.60	0.00	-3.59%	4.20%	13.93	-3.59%	-3.59%	391.60	5.16%	391.98	5.00	392.09	392.19

Notes:
Note: (-) sign indicate downward slope

TYPICAL PAVEMENT WEDGING DETAIL

TO BE USED FOR PAVEMENT ADDITIONS

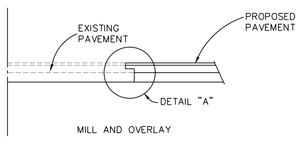

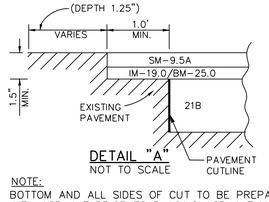

NOTE:
BOTTOM AND ALL SIDES OF CUT TO BE PREPARED WITH ASPHALT PRIOR TO PLACING ASPHALT MIX.

TYPICAL SECTION ASPHALT DRIVEWAY REPLACEMENT

(NOT TO SCALE)

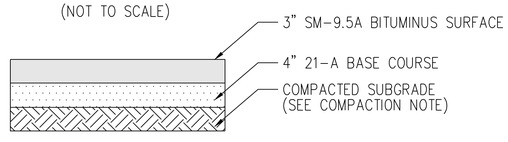

*THE PROP. PAVEMENT THICKNESS ARE BASED ON THE VIENNA PAVEMENT DESIGN GUIDE (2015), PAVEMENT SECTION C.

LEGEND

- MILL & OVERLAY WITH BUILD UP ON THE EXISTING PAVEMENT
- CUT WITH FULL NEW SECTION REPLACEMENT *1.5" SM-9.5A *2.5" IM-19.0 *4.0" BM-25.0 *6.0" 21-B
- PROPOSED CONCRETE (CURB & GUTTER, CG-12, SIDEWALK ETC)
- MILL & OVERLAY WITH NO CHANGE IN GRADE
- PROPOSED GRAVEL DRIVEWAY
- PROPOSED ASPHALT DRIVEWAY

No.	DATE	DESCRIPTION
4	02/19/25	100% PLAN
3	10/18/24	95% REVISION
2	08/02/24	95% PLAN
2	06/25/24	95% DRAFT
1	10/09/18	REVISION PER TOWN OF VIENNA COMMENTS

REVISIONS

PLAN DATE
02-21-2018
04-18-2018
08-13-2018
10-09-2018
06-25-2024
08-02-2024
10-18-2024
02-19-2025

urban
Planners · Engineers · Landscape Architects · Land Surveyors
Urban, Ltd.
7712 Little River Turnpike
Annandale, Virginia 22003
Tel. 703.642.8820
Fax. 703.642.8251
www.urban-ltd.com

COMMONWEALTH OF VIRGINIA
C. RYAN CONNOR
Lic. No.039531
02/19/2025
PROFESSIONAL ENGINEER

PAVEMENT PLAN & ROADWAY COMPUTATIONS
ROADWAY AND DRAINAGE IMPROVEMENT PLAN
GLYNDON STREET, N.E.
TOWN OF VIENNA
FAIRFAX COUNTY, VIRGINIA

DATE: AUG. 2018
SCALE: 1"=20'
C.I. 1'

SHEET 10 OF 15

FILE No.
PP-2156

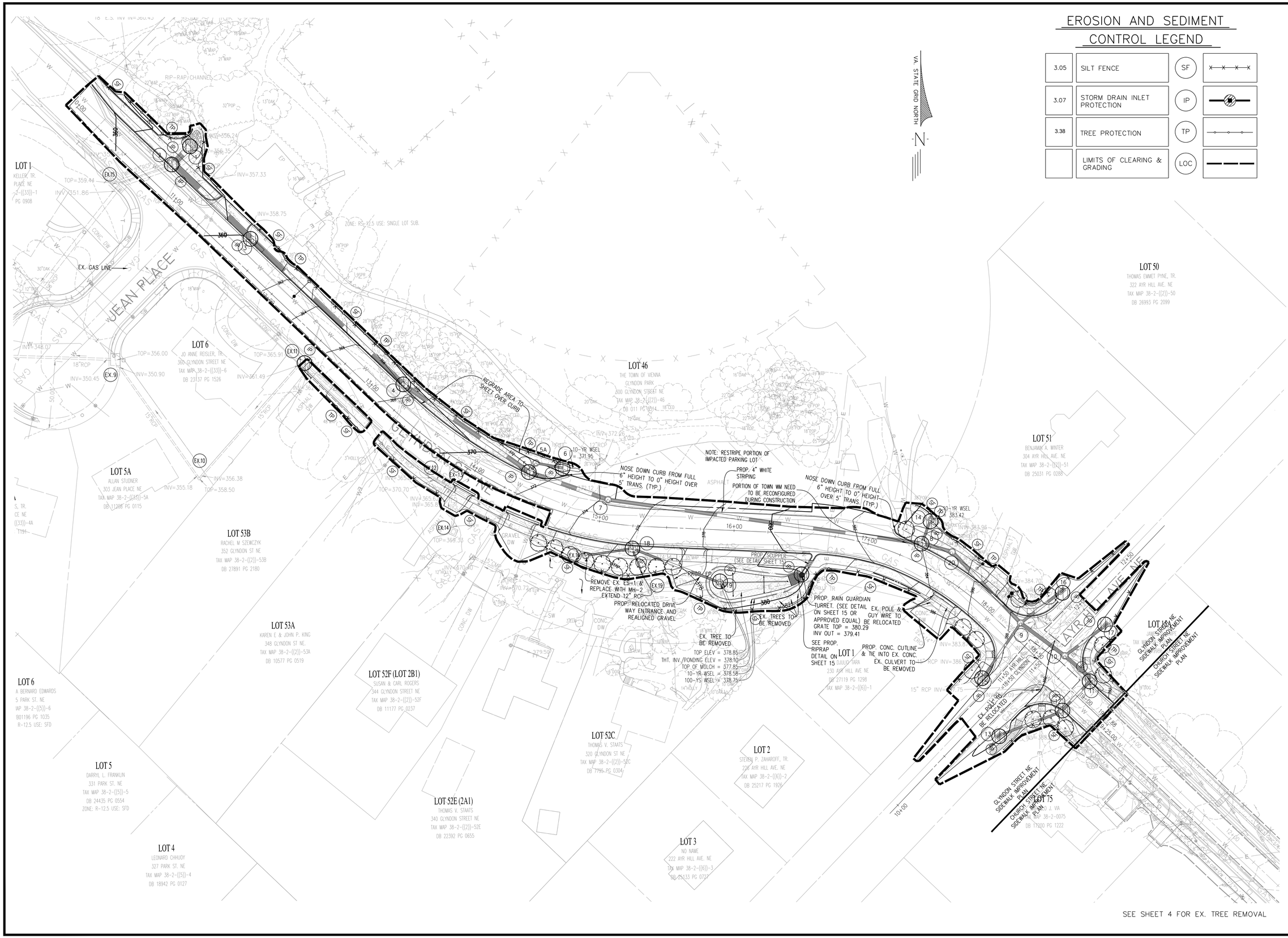

No.	DATE	DESCRIPTION
4	02/19/25	100% PLAN
3	10/18/24	95% REVISION
2	08/02/24	95% PLAN
2	06/25/24	95% DRAFT
1	10/09/18	REVISION PER TOWN OF VIENNA COMMENTS

REVISIONS

PLAN DATE
02-21-2018
04-18-2018
08-13-2018
10-09-2018
06-25-2024
08-02-2024
10-18-2024
02-19-2025

Urban, Ltd.
7712 Little River Turnpike
Annandale, Virginia 22003
Tel. 703.642.8360
Fax. 703.642.8251
www.urban-ltd.com
Planners · Engineers · Landscape Architects · Land Surveyors

COMMONWEALTH OF VIRGINIA
C. RYAN CONNOR
Lic. No.039531
02/19/2025
PROFESSIONAL ENGINEER

EROSION & SEDIMENT CONTROL PHI & PHII
ROADWAY AND DRAINAGE IMPROVEMENT PLAN
GLYNDON STREET, N.E.
TOWN OF VIENNA
FAIRFAX COUNTY, VIRGINIA

SCALE: 1"=30'
C.I. 1'
DATE: AUG. 2018

SHEET 11 OF 15

FILE No. PP-2156

EROSION AND SEDIMENT CONTROL NARRATIVE

PROJECT DESCRIPTION

THIS PROJECT CONSISTS OF A SIDEWALK IMPROVEMENT PLAN FOR THE EXISTING GLYNDON STREET, NE. IMPROVEMENTS INCLUDE CURB AND GUTTER, SIDEWALK, STORM, AND DRIVEWAY ENTRANCES. THE TOTAL DISTURBED ACREAGE FOR THE PROJECT IS 1.21 ACRES.

EXISTING SITE CONDITIONS

THE SITE IS AN EXISTING ROAD, GLYNDON STREET, NE. WITH A GRAVEL SHOULDER, DRIVEWAY ENTRANCES, AND FRONT YARDS CONTAINING FENCING, MAILBOXES, WATER METERS, FIRE HYDRANTS, ETC.

ADJACENT PROPERTIES

THE SITE IS SURROUNDED BY SINGLE-FAMILY LOTS AND PUBLIC PARK.

OFF-SITE AREAS

THERE IS CONSTRUCTION ON OFFSITE AREAS ADJACENT TO ROADWAY. EROSION AND SEDIMENT CONTROL DEVICES WILL BE PLACED OFFSITE AS SHOWN ON PLAN.

SOILS INFORMATION

SEE SHEET 2.

CRITICAL EROSION AREAS

CRITICAL AREAS ASSOCIATED WITH THIS PROJECT INCLUDE STEEP SLOPES, SLOPES GREATER THAN 20% ARE PRESENT. THERE ARE NO RESOURCE PROTECTION AREAS WITHIN THE PROJECT LIMITS.

EROSION AND SEDIMENT CONTROL MEASURES

THE EROSION AND SEDIMENT CONTROL MEASURES FOR THIS PROJECT AREA ARE DESCRIBED IN DETAIL IN THE EROSION AND SEDIMENT CONTROL PROGRAM ON THIS SHEET.

OVERALL MANAGEMENT STRATEGY

THE OVERALL STRATEGY FOR THIS SITE IS TO TREAT THE ONSITE RUNOFF WITH PERIMETER SILT FENCE, INLET PROTECTION, AND TO PROVIDE DRAINAGE RELIEF AT LOW POINTS WITH CHECK DAMS.

EROSION CONTROL PROGRAM (GENERAL GUIDELINES)

NOT MORE THAN 75% OF THE SITE IS TO BE DENUDED AT ONE TIME. TEMPORARY SEEDING AND MULCHING ARE TO BE APPLIED TO ANY AREA WITHIN THE SITE NOT CONTINUOUSLY WORKED FOR 5 DAYS AFTER CLEARING AND ROUGH GRADING. IN ADDITION, THE CONTRACTOR SHALL TAKE THE FOLLOWING STEPS TO MINIMIZE THE VOLUME OF SILT:

1. CONTRACTOR SHALL EVALUATE THE SITE TO DETERMINE EXTENSIVE CUT AND FILL AREAS AND SHALL WORK THOSE AREAS TO MINIMIZE THE EXTENT OF HEAVY EQUIPMENT WORK. CONTRACTOR SHALL STRIVE TO BRING AREAS TO GRADE (ROUGH OR FINISH) AND TO STABILIZE, BY TEMPORARY OR PERMANENT VEGETATION, THESE DISTURBED AREAS PRIOR TO BEGINNING WORK IN OTHER AREAS.

2. FILL AREAS SHALL BE COMPACTED COMPLETELY PRIOR TO THE END OF EACH WORK DAY. FILL SLOPE SURFACES SHALL BE LEFT ROUGHENED TO REDUCE SHEET EROSION OF THE SLOPES. CONTRACTOR SHALL REDIRECT CONCENTRATED RUNOFF, BY EARTH BERMS OR OTHER DEVICES, AROUND ACTIVELY DISTURBED AREAS TO STABILIZE OUTLETS.

3. CUT SLOPE, AS NECESSARY, SHALL BE PROTECTED FROM CONCENTRATED FLOW BY BERMS ABOVE THE SLOPE AND DIRECTED AROUND THE DISTURBED AREA TO STABILIZED OUTLETS.

4. IN NEW PAVEMENT AREAS, PLACE THE AGGREGATE BASE STONE ON THE FINISH SUBGRADE AT THE EARLIEST POSSIBLE TIME.

5. MATERIALS AND METHODS USED IN CONSTRUCTION AND MAINTENANCE OF THE EROSION AND SEDIMENT CONTROL MEASURES REQUIRED SHALL CONFORM TO THE CONSTRUCTION STANDARDS AND SPECIFICATIONS IN CHAPTER 3 OF THE VIRGINIA EROSION AND SEDIMENT CONTROL HANDBOOK (VESCH), THIRD EDITION, 1992, AS WELL AS ANY OTHER APPLICABLE LOCAL, STATE, AND FEDERAL REGULATIONS.

6. WHERE APPROPRIATE AND FEASIBLE, AREAS IN WHICH NATURAL GRADES ARE NOT IMPACTED BY PROPOSED GRADING OR STOCKPILE AREAS, SHALL BE LEFT WITH THEIR EXISTING VEGETATION IN PLACE. ALL AREAS SUBJECT TO GRADING SHALL BE SEEDED AND MULCHED AS SOON AS PRACTICAL.

7. PERMANENT OR SOIL STABILIZATION SHALL BE APPLIED TO DENUDED AREAS WITHIN SEVEN DAYS AFTER FINAL GRADE IS REACHED ON ANY PORTION OF THE SITE. TEMPORARY SOIL STABILIZATION SHALL BE APPLIED WITHIN SEVEN DAYS TO DENUDED AREAS THAT MAY NOT BE AT FINAL GRADE BUT WILL REMAIN DORMANT FOR LONGER THAN 30 DAYS. PERMANENT STABILIZATION SHALL BE APPLIED TO AREAS THAT ARE TO BE LEFT DORMANT FOR MORE THAN 1 YEAR.

SEDIMENT CONTROL PROGRAM (PHASE I)

1. INSTALL PERIMETER CONTROLS AS SHOWN ON THE PHASE I PLAN (SILT FENCE, INLET PROTECTION, ETC.)

   PERIMETER CONTROLS MUST BE APPROVED IN WRITING BY THE TOWN E & S INSPECTOR BEFORE CLEARING OF THE SITE CAN TAKE PLACE

2. COMMENCE CONSTRUCTION OF ALL UTILITIES AND GRADING OF THE SITE.

SEDIMENT CONTROL PROGRAM (PHASE II)

1. COMMENCE CONSTRUCTION OF CURB AND GUTTER, PAVEMENT, AND SIDEWALK AS SHOWN ON THE CONSTRUCTION PLANS.

2. INLET PROTECTION (IP) SHALL BE PROVIDED AT STORM DRAIN INLETS AS THEY ARE CONSTRUCTED.

3. PERMANENTLY STABILIZE UNPAVED AREAS WITH SEED OR SOD (PER SEC. 3.32 AND SEC. 3.33 OF THE VIRGINIA EROSION AND SEDIMENT CONTROL HANDBOOK).

4. THE CONTROL MEASURES MAY NOT BE REMOVED UNTIL ALL OF THE DISTURBED AREAS HAVE BEEN STABILIZED AND ONLY AS APPROVED AND DIRECTED BY THE INSPECTOR.

MAINTENANCE

THE FOLLOWING IS A PROGRAM OF MAINTENANCE FOR THE MECHANICAL AND PERMANENT CONTROLS SPECIFIED IN THIS NARRATIVE AND ON THE PLAN:

1. THE SITE SUPERINTENDENT, OR HIS REPRESENTATIVE, SHALL MAKE A VISUAL INSPECTION OF ALL MECHANICAL CONTROLS AND NEWLY STABILIZED AREAS (I.E., SEEDED OR SODDEN AREAS) ON A DAILY BASIS (ESPECIALLY AFTER A HEAVY RAINFALL) TO INSURE THAT ALL CONTROLS ARE IN PLACE AND THAT NONE HAVE BEEN DAMAGED. ANY DAMAGED CONTROL SHALL BE REPAIRED PRIOR TO END OF THE WORK DAY TO INCLUDE RESEEDING OR RESETTING, IF NECESSARY. WHEN IT IS CLEAR THAT PLANTS HAVE NOT GERMINATED ON AN AREA OR HAVE DIED, THESE AREAS MUST BE RE-SEEDED IMMEDIATELY TO PREVENT EROSION DAMAGE.

2. AFTER ALL CONSTRUCTION OPERATIONS HAVE ENDED AND ALL DISTURBED AREAS ARE STABILIZED, MECHANICAL SEDIMENT CONTROLS SHALL BE REMOVED AND GROUND SHALL BE RESTORED ESTABLISHMENT OF VEGETATION, TO ITS NATURAL OR PROPOSED CONDITION. REMOVAL OF ANY CONTROL IS CONTINGENT UPON APPROVAL BY THE TOWN INSPECTOR.

PERMANENT STABILIZATION

AFTER CONSTRUCTION IS COMPLETE ALL DISTURBED AREAS SHALL BE SEEDED AND MULCHED IN ACCORDANCE WITH SEC. 3.32 AND 3.35 OF THE VIRGINIA EROSION AND SEDIMENT CONTROL HANDBOOK, EXCEPT IN THOSE UNPAVED AREAS WHERE THE TOWN DETERMINES SOD SHALL BE PLACED.

STORMWATER MANAGEMENT

N/A

ADDITIONAL NOTES

1. THE TOWN INSPECTOR SHALL HAVE THE AUTHORITY TO DIRECT THE ADDITION OR DELETION OF EROSION AND SEDIMENT CONTROLS AS SITE CONDITIONS WARRANT.

2. EARTHEN STRUCTURES ARE TO BE STABILIZED IMMEDIATELY UPON COMPLETION.

3. CONTRACTOR SHALL CONTACT TOWN ARBORIST PRIOR TO BEGINNING EXCAVATION TO CLOSELY COORDINATE ROOT PRUNING WITHIN CRITICAL ROOT ZONES. CONTRACTOR SHALL EMPLOY APPROPRIATE ROOT PROTECTION METHODS PER TOWN ARBORIST RECOMMENDATION IN ORDER TO MAXIMIZE THE POTENTIAL FOR TREE PRESERVATION.

GENERAL LAND CONSERVATION NOTES

1. ALL LAND CONSERVATION ACTIVITIES SHALL BE PERFORMED IN ACCORDANCE WITH THE VIRGINIA EROSION AND SEDIMENT CONTROL HANDBOOK.

2. NO DISTURBED AREA WILL REMAIN DENUDED FOR MORE THAN 14 CALENDAR DAYS UNLESS OTHERWISE AUTHORIZED BY THE TOWN.

3. ALL EROSION AND SEDIMENT CONTROL MEASURES ARE TO BE PLACED PRIOR TO OR AS THE FIRST STEP IN GRADING. FIRST AREAS TO BE CLEARED ARE TO BE THOSE REQUIRED FOR THE PERIMETER CONTROLS.

4. ALL STORM SEWER LINES NOT IN STREETS ARE TO BE MULCHED AND SEEDED WITHIN 5 DAYS AFTER BACKFILL. NO MORE THAN 500 FEET ARE TO BE OPEN AT ONE TIME.

5. ELECTRIC POWER, TELEPHONE AND GAS SUPPLY TRENCHES ARE TO BE COMPACTED, SEEDED AND MULCHED WITHIN 5 DAYS AFTER BACKFILL.

6. ALL TEMPORARY EARTH BERMS, AND DIVERSIONS ARE TO BE MULCHED AND SEEDED FOR TEMPORARY VEGETATIVE COVER IMMEDIATELY AFTER GRADING. STRAW OR HAY MULCH IS REQUIRED. THE SAME APPLIES TO ALL SOIL STOCKPILES.

7. DURING CONSTRUCTION, ALL STORM SEWER INLETS WILL BE PROTECTED BY INLET PROTECTION DEVICES, MAINTAINED AND MODIFIED AS REQUIRED BY CONSTRUCTION PROGRESS.

8. AT THE COMPLETION OF CONSTRUCTION, ALL TEMPORARY SILTATION AND EROSION CONTROLS SHALL BE REMOVED AND ALL DISTURBED AREAS SHALL BE STABILIZED.

EROSION AND SEDIMENT CONTROL LEGEND

3.05	SILT FENCE	SF	X—X—X—X
3.07	STORM DRAIN INLET PROTECTION	IP	
3.20	CHECK DAM	CD	▶ ▶ ▶
3.38	TREE PROTECTION*	TP	
	LIMITS OF CLEARING & GRADING	LOC	

*CONTRACTOR TO INSTALL SUPER SILT FENCE TO ACT AS TREE PROTECTION

EROSION AND SEDIMENT CONTROL MEASURES:

UNLESS OTHERWISE INDICATED, ALL VEGETATIVE AND STRUCTURAL EROSION AND SEDIMENT CONTROL PRACTICES SHALL BE CONSTRUCTED AND MAINTAINED ACCORDING TO MINIMUM STANDARDS AND SPECIFICATIONS OF THE VESCH.

THE STRUCTURAL PRACTICES PROPOSED WITH THIS PLAN ARE AS FOLLOWS:

1. SILT FENCE – 3.05
   A TEMPORARY SEDIMENT BARRIER CONSISTING OF A SYNTHETIC FILTER FABRIC STRETCHED ACROSS AND ATTACHED TO SUPPORTING POSTS AND ENTRENCHED.

2. STORM DRAIN INLET PROTECTION – 3.07
   A SEDIMENT FILTER OR AN EXCAVATED IMPOUNDING AREA AROUND A STORM DRAIN DROP INLET OR CURB INLET.

3. TOPSOILING – 3.30
   PRESERVING AND REUSING THE SURFACE LAYER OF SOIL FROM AREAS TO BE GRADED.

4. TEMPORARY SEEDING – 3.31
   THE ESTABLISHMENT OF A TEMPORARY VEGETATIVE COVER ON DISTURBED AREAS BY SEEDING WITH APPROPRIATE RAPIDLY GROWING ANNUAL PLANTS.

5. SODDING – 3.33
   STABILIZING FINE-GRADED DISTURBED AREAS BY ESTABLISHING PERMANENT GRASS STANDS WITH SOD

6. MULCHING – 3.35
   APPLICATION OF PLANT RESIDUES OR OTHER SUITABLE MATERIALS TO THE SOIL SURFACE.

7. TREE PROTECTION – 3.38
   PROTECTION OF DESIRABLE TREES FROM MECHANICAL AND OTHER INJURY DURING LAND DISTURBING AND CONSTRUCTION ACTIVITY.

8. DUST CONTROL – 3.39
   REDUCING SURFACE AND AIR MOVEMENT OF DUST DURING LAND DISTURBING, DEMOLITION, AND CONSTRUCTION ACTIVITIES, BY SPRAYING FROM A WATER TRUCK OR OTHER APPROVED METHOD.

9. CHECK DAM – 3.20
   SEVERAL ROCK CHECK DAMS WILL BE INSTALLED UPSLOPE OF THE CULVERT CROSSINGS TO REDUCE THE VELOCITY OF CONCENTRATED FLOWS AND REDUCE SEDIMENT.

ROCK CHECK DAM (CD)

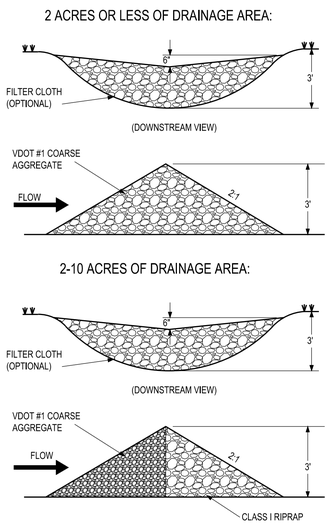

SOURCE: Va. DSWC

PLATE 3.20-1

STORM DRAIN INLET PROTECTION 3.07-6 (IP)

GRAVEL CURB INLET SEDIMENT FILTER

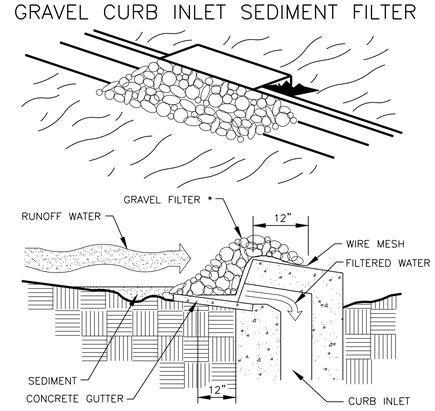

SPECIFIC APPLICATION

THIS METHOD OF INLET PROTECTION IS APPLICABLE AT CURB INLETS WHERE PONDING IN FRONT OF THE STRUCTURE IS NOT LIKELY TO CAUSE INCONVENIENCE OR DAMAGE TO ADJACENT STRUCTURES AND UNPROTECTED AREAS.

* GRAVEL SHALL BE VDOT #3, #357 OR #5 COARSE AGGREGATE.

SILT FENCE (WITHOUT WIRE SUPPORT) 3.05-2 (SF)

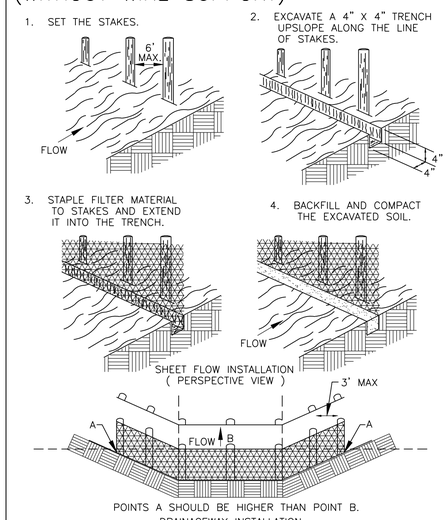

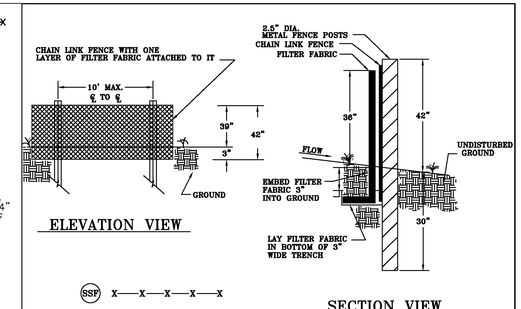

SUPER SILT FENCE

NO SCALE

FENCING

Chain link fence shall be 39" above grade with 3" embedded for a total fabric width of 42". The post shall be 42" above grade with 30" placed below grade (without concrete) for a total length of 72".

NOTES

1. Chain link fence shall be fastened securely to fence posts with wire ties.
2. Filter fabric shall be fastened securely to chain link fence with ties spaced horizontally 24" at the top and midsection.
3. Physical properties of the filter fabric shall conform to the latest edition of THE VIRGINIA EROSION & SEDIMENT CONTROL HANDBOOK.
4. When two sections of filter fabric adjoin each other, they shall be overlapped by 6".
5. Maintenance shall be performed as needed and material shall be removed when sediment build-up reaches 50% of the height of the super silt fence.

SUPER SILT FENCE

NOTE: TO BE USED IN TREE PROTECTION

No.	DATE	DESCRIPTION
4	02/19/25	100% PLAN
3	10/18/24	95% REVISION
2	08/02/24	95% PLAN
2	06/25/24	95% DRAFT
1	10/09/18	REVISION PER TOWN OF VIENNA COMMENTS

REVISIONS

PLAN DATE
02-21-2018
04-18-2018
08-13-2018
10-09-2018
06-25-2024
08-02-2024
10-18-2024
02-19-2025

Urban, Ltd.
7712 Little River Turnpike
Annandale, Virginia 22003
Tel. 703.642.8820
Fax. 703.642.8251
www.urban-ltd.com
urban™
Planners · Engineers · Landscape Architects · Land Surveyors

COMMONWEALTH OF VIRGINIA
C. RYAN CONNOR
Lic. No.039531
02/19/2025
PROFESSIONAL ENGINEER

EROSION & SEDIMENT CONTROL NARRATIVE & DETAILS

ROADWAY AND DRAINAGE IMPROVEMENT PLAN
GLYNDON STREET, N.E.
TOWN OF VIENNA
FAIRFAX COUNTY, VIRGINIA

DATE: AUG. 2018

SCALE: N/A

C.I. N/A

SHEET 12 OF 15

FILE No. PP-2156

BMP SITE REQUIREMENT COMPUTATIONS

Project Name:	Town of Vienna Glyndon Street NE
Date:	10/18/2024
Linear Development Project?	No

CLEAR ALL (Ctrl+Shift+R)

data input cells
constant values
calculation cells
final results

Site Information

Post-Development Project (Treatment Volume and Loads)

Enter Total Disturbed Area *(acres)* → 1.21

Maximum reduction required:	*20%*
The site's net increase in impervious cover (acres) is:	*0.28*
Post-Development TP Load Reduction for Site (lb/yr):	*0.77*

Check:
BMP Design Specifications List: 2013 Draft Stds & Specs
Linear project? No
Land cover areas entered correctly? ✓
Total disturbed area entered? ✓

Pre-ReDevelopment Land Cover (acres)

	A Soils	B Soils	C Soils	D Soils	Totals
Forest/Open Space (acres)-- undisturbed, protected forest/open space or reforested	0.00	0.00	0.00	0.00	0.00
Managed Turf (acres) -- disturbed, graded for yards or other turf to be	0.00	0.00	0.00	0.67	0.67
Impervious Cover (acres)	0.00	0.00	0.00	0.54	0.54
					1.21

Post-Development Land Cover (acres)

	A Soils	B Soils	C Soils	D Soils	Totals
Forest/Open Space (acres)-- undisturbed, protected forest/open space or reforested	0.00	0.00	0.00	0.00	0.00
Managed Turf (acres) -- disturbed, graded for yards or other turf to be	0.00	0.00	0.00	0.39	0.39
Impervious Cover (acres)	0.00	0.00	0.00	0.82	0.82
Area Check	**OK.**	**OK.**	**OK.**	**OK.**	1.21

Constants

Annual Rainfall (inches)	43
Target Rainfall Event (inches)	1.00
Total Phosphorus (TP) EMC (mg/L)	0.26
Total Nitrogen (TN) EMC (mg/L)	1.86
Target TP Load (lb/acre/yr)	0.41
Pj (unitless correction factor)	0.90

Runoff Coefficients (Rv)

	A Soils	B Soils	C Soils	D Soils
Forest/Open Space	0.02	0.03	0.04	0.05
Managed Turf	0.15	0.20	0.22	0.25
Impervious Cover	0.95	0.95	0.95	0.95

LAND COVER SUMMARY – PRE-REDEVELOPMENT

Land Cover Summary-Pre

Pre-ReDevelopment	Listed	Adjusted[1]
Forest/Open Space Cover (acres)	0.00	0.00
Weighted Rv(forest)	0.00	0.00
% Forest	0%	0%
Managed Turf Cover (acres)	0.67	0.39
Weighted Rv(turf)	0.25	0.25
% Managed Turf	55%	42%
Impervious Cover (acres)	0.54	0.54
Rv(impervious)	0.95	0.95
% Impervious	45%	58%
Total Site Area (acres)	**1.21**	**0.93**
Site Rv	**0.56**	**0.66**

Treatment Volume and Nutrient Load

Pre-ReDevelopment Treatment Volume (acre-ft)	0.0567	0.0509
Pre-ReDevelopment Treatment Volume (cubic feet)	2,470	2,216
Pre-ReDevelopment TP Load (lb/yr)	**1.55**	**1.39**
Pre-ReDevelopment TP Load per acre (lb/acre/yr)	1.28	1.50
Baseline TP Load (lb/yr) (0.41 lbs/acre/yr applied to pre-redevelopment area excluding pervious land proposed for new impervious cover)		0.38

[1] *Adjusted Land Cover Summary:*
Pre ReDevelopment land cover minus pervious land cover (forest/open space or managed turf) acreage proposed for new impervious cover.

Adjusted total acreage is consistent with Post-ReDevelopment acreage (minus acreage of new impervious cover).

Column I shows load reduction requriement for new impervious cover (based on new development load limit, 0.41 lbs/acre/year).

LAND COVER SUMMARY -- POST DEVELOPMENT

Land Cover Summary-Post (Final)

Post ReDev. & New Impervious	
Forest/Open Space Cover (acres)	0.00
Weighted Rv(forest)	0.00
% Forest	0%
Managed Turf Cover (acres)	0.39
Weighted Rv (turf)	0.25
% Managed Turf	32%
Impervious Cover (acres)	0.82
Rv(impervious)	0.95
% Impervious	68%
Final Site Area (acres)	**1.21**
Final Post Dev Site Rv	**0.72**

Land Cover Summary-Post

Post-ReDevelopment	
Forest/Open Space Cover (acres)	0.00
Weighted Rv(forest)	0.00
% Forest	0%
Managed Turf Cover (acres)	0.39
Weighted Rv (turf)	0.25
% Managed Turf	42%
ReDev. Impervious Cover (acres)	0.54
Rv(impervious)	0.95
% Impervious	58%
Total ReDev. Site Area (acres)	**0.93**
ReDev Site Rv	**0.66**

Land Cover Summary-Post

Post-Development New Impervious	
New Impervious Cover (acres)	0.28
Rv(impervious)	0.95

Treatment Volume and Nutrient Load

Final Post-Development Treatment Volume (acre-ft)	0.0730
Final Post-Development Treatment Volume (cubic feet)	3,182
Final Post-Development TP Load (lb/yr)	**2.00**
Final Post-Development TP Load per acre (lb/acre/yr)	1.65

Post-ReDevelopment Treatment Volume (acre-ft)	0.0509
Post-ReDevelopment Treatment Volume (cubic feet)	2,216
Post-ReDevelopment Load (TP) (lb/yr)*	**1.39**
Post-ReDevelopment TP Load per acre (lb/acre/yr)	1.50
Max. Reduction Required (Below Pre-ReDevelopment Load)	**20%**
TP Load Reduction Required for Redeveloped Area (lb/yr)	**0.28**

Post-Development Treatment Volume (acre-ft)	0.0222
Post-Development Treatment Volume (cubic feet)	966
Post-Development TP Load (lb/yr)	**0.61**
TP Load Reduction Required for New Impervious Area (lb/yr)	**0.49**

Post-Development Requirement for Site Area

TP Load Reduction Required (lb/yr)	**0.77**

Nitrogen Loads (Informational Purposes Only)

Pre-ReDevelopment TN Load (lb/yr)	11.10
Final Post-Development TN Load (Post-ReDevelopment & New Impervious) (lb/yr)	14.30

BMP NARRATIVE

NOTE: THE COMPUTATIONS SHOWN ON THIS SHEET WERE DETERMINED USING VERSION 3.0 OF THE VIRGINIA RUNOFF REDUCTION METHOD (VRRM) RE-DEVELOPMENT COMPLIANCE SPREADSHEET RELEASED MAY, 2016.

THE DRAINAGE AREA UTILIZED IN THE WATER QUALITY COMPUTATIONS CONSISTS OF SITE DISTURBANCE AREA. THE MAJORITY OF THIS SITE DRAINS TO THE COMBINATION OF THE EXISTING INLETS AND PROPOSED INLETS THAT ULTIMATELY ENTER INTO THE EXISTING STORM SYSTEM WITHIN THE PUBLIC ROW.

PER THE BMP CALCULATIONS ON THIS SHEET AND IN COMPLIANCE WITH VSMP (VRRM) WATER QUALITY CONTROL REQUIREMENTS, THE PHOSPHORUS REMOVAL REQUIREMENT OF 0.77 POUNDS/YEAR IS TO BE OFFSET BY THE PHOSPHORUS REMOVAL OF 0.39 POUNDS/YEAR ACHIEVED BY THE INSTALLATION OF ONE MICRO-BIORETENTION, AND BY THE PURCHASE OF NUTRIENT CREDITS OR THE USE OF EXCESS IN OTHER TOWN PROJECTS, AT THE DISCRETION OF THE TOWN ENGINEER.
THE TP LOAD REDUCTION ACHIEVED IS COMPUTED UTILIZING THE ONSITE AND OFFSITE DRAINAGE AREA TO BMP DEVICE (MICRO-BIORETENTION) AS SHOWN ON SHEET 13.

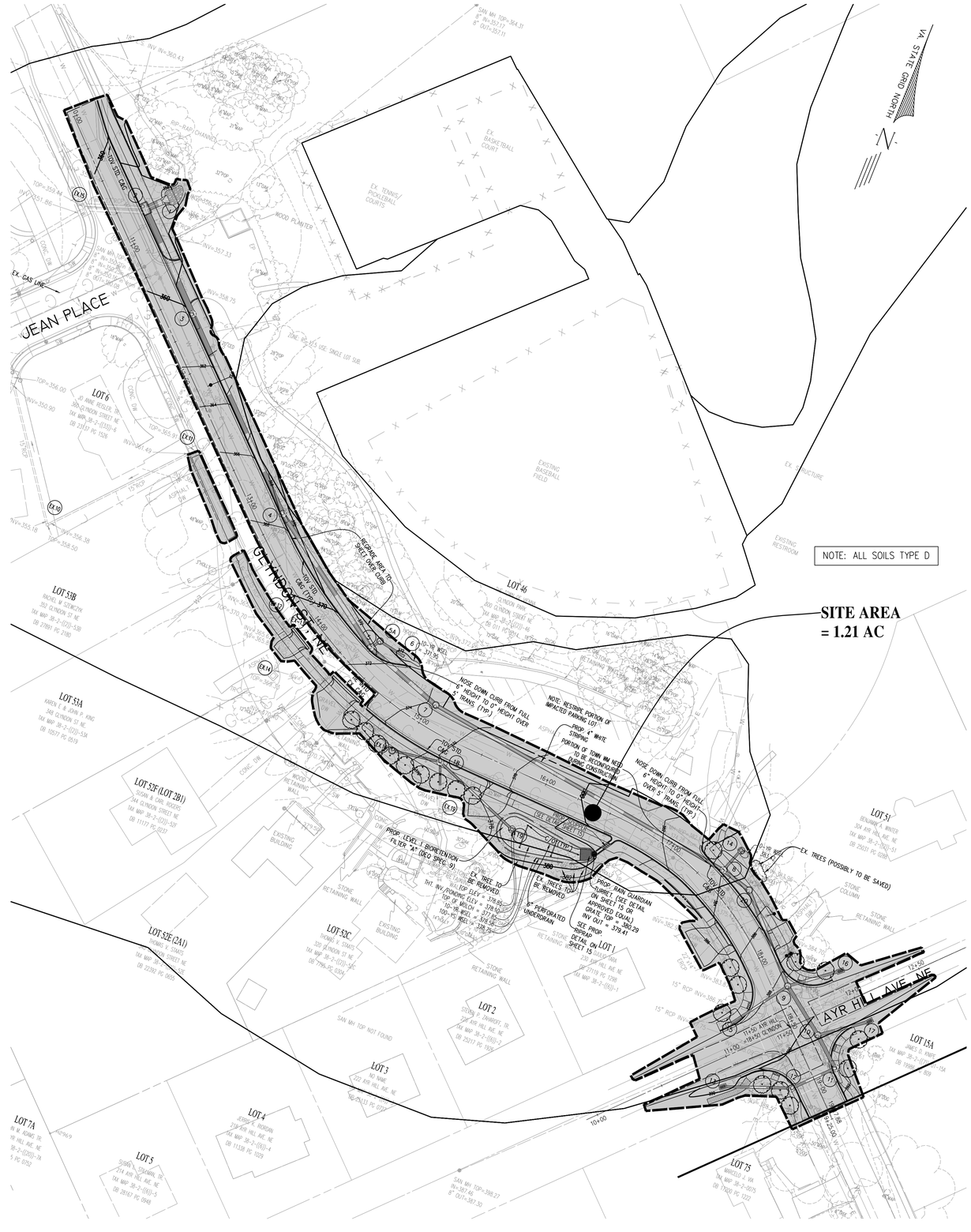

No.	DATE	DESCRIPTION
4	02/19/25	100% PLAN
3	10/18/24	95% REVISION
2	08/02/24	95% PLAN
2	06/25/24	95% DRAFT
1	10/09/18	REVISION PER TOWN OF VIENNA COMMENTS

REVISIONS

PLAN DATE
02-21-2018
04-18-2018
08-13-2018
10-09-2018
06-25-2024
08-02-2024
10-18-2024
02-19-2025

urban™
Planners · Engineers · Landscape Architects · Land Surveyors
Urban, Ltd.
7712 Little River Turnpike
Annandale, Virginia 22003
Tel. 703.642.8080
Fax. 703.642.8251
www.urban-ltd.com

COMMONWEALTH OF VIRGINIA
C. RYAN CONNOR
Lic. No.039531
02/19/2025
PROFESSIONAL ENGINEER

BMP COMPUTATION & DETAILS
ROADWAY AND DRAINAGE IMPROVEMENT PLAN
GLYNDON STREET, N.E.
TOWN OF VIENNA
FAIRFAX COUNTY, VIRGINIA

SCALE: 1"=40' C.I. = 2' DATE: AUG. 2018

SHEET 13 OF 15

FILE No. PP-2156

MICRO-BIORETENTION CALCULATIONS
VA DEQ Design Spec #9, Version 2.0
Spec Date March 1, 2013

Facility Name: A
Type of Facility: Level 1

A. SIZING CALCULATIONS

Variable	Value	Units	Description/Notes
Rd =	1.0	in	Per VA DEQ Specs, use 1.0 for water quality storm as a standard
Rv_{MT} =	0.25	n/a	Managed Turf Land Cover Coefficient from VRRM Spreadsheet (typically 0.25)
Rv_{IC} =	0.95	n/a	Impervious Surface Land Cover Coefficient from VRRM Spreadsheet (typically 0.95)
CA_{MT} =	0.48	ac	Managed Turf Drainage Area to facility from VRRM Spreadsheet*
CA_{IC} =	0.20	ac	Impervious Surface Drainage Area to facility from VRRM Spreadsheet*
CA =	0.68	ac	Total Drainage Area to facility
Rv_{CA} =	0.46	n/a	Composite Land Cover Coefficient to facility
Tv_{CA} =	1125	cf	Treatment Volume from drainage area to facility
V_{US} =	0	cf	Volume of runoff from upstream facility, if any, (see VRRM Spreadsheet Column E)
Tv_{BMP} =	1125	cf	Total Treatment Volume to facility (Tv to be used in sizing calcs)

*If DA's to multiple facilities are combined on VRRM Spreadsheet, only include the area draining to this specific facility.

Porosity (per VA DEQ Design Spec #9 6.1.1):
Soil Media η = 0.25
Gravel η = 0.40
Surface Storage η = 1.00
Mulch η = 0.25

Bioretention Facility Layer Depths:
Soil Media = 25 inches
Gravel = 12 inches
Surface Storage = 3 inches
Mulch Storage = 3 inches

Design Storage Depth = 1.23 ft

Surface Area (SA) Required:
Type of Facility: Level 1
V_{US} = 0 cf
Level 1: SA = {Tv_{BMP} - volume reduced by upstream BMP} / Design Storage Depth
Level 2: SA = {(1.25 x Tv_{BMP}) - volume reduced by upstream BMP} / Design Storage Depth
SA = (1 x 1125 - 0) / 1.23

SA = 912 sf

Area Provided (SA) = **916 SF**
% of Area treated = **100.39%**

B. DESIGN DATA

Variable	Value	Units	Notes
Facility Name:	A		
Type of Facility:	Level 1		
Surface Area =	916	sf	
Mulch Bed Elev =	377.85	ft	
Ponding Depth =	0.25	ft	6" max preferred
Max. Ponding Elev =	378.10	ft	
Top of Berm Elev =	378.80	ft	
Berm Width =	2.00	ft	
Inlet Elev =	378.10	ft	
Q10 =	1.72	cfs	
10-year Depth =	0.48	ft	from inlet comps
10-year WSEL =	378.58	ft	
10-year Freeboard =	0.22	ft	
Q100 =	2.29	cfs	
100-year Depth =	0.65	ft	from inlet / weir comps
100-year WSEL =	378.75	ft	

MICRO-BIORETENTION "A" PLAN
(SCALE 1"=10')

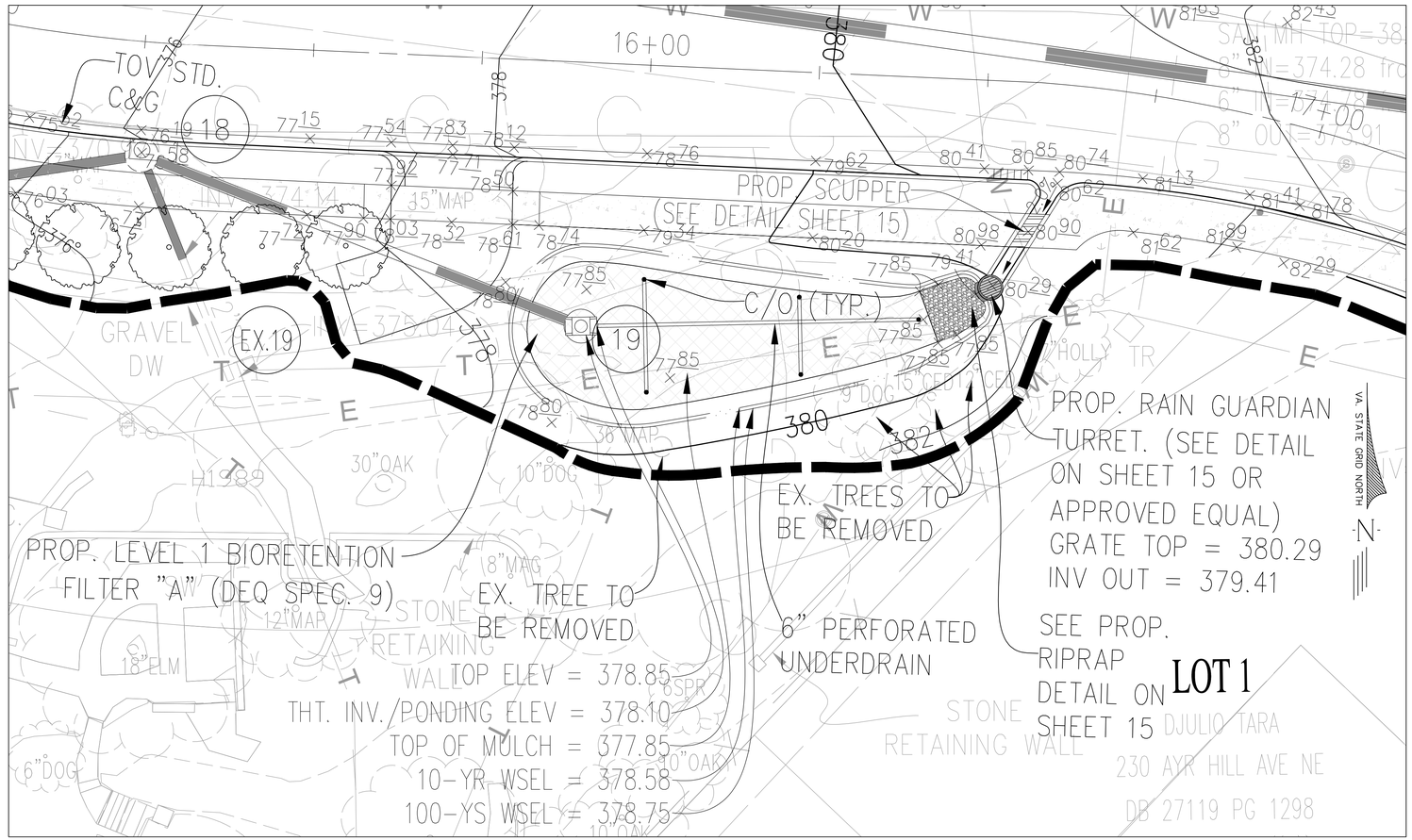

Drainage Area A

Drainage Area A Land Cover (acres)

	A Soils	B Soils	C Soils	D Soils	Totals	Land Cover Rv
Forest/Open Space (acres)					0.00	0.00
Managed Turf (acres)				0.48	0.48	0.25
Impervious Cover (acres)				0.20	0.20	0.95
				Total	0.68	

CLEAR BMP AREAS

Total Phosphorus Available for Removal in D.A. A (lb/yr)	0.71
Post Development Treatment Volume in D.A. A (ft^3)	1,125

Stormwater Best Management Practices (RR = Runoff Reduction)

--Select from dropdown lists-

Practice	Runoff Reduction Credit (%)	Managed Turf Credit Area (acres)	Impervious Cover Credit Area (acres)	Volume from Upstream Practice (ft^3)	Runoff Reduction (ft^3)	Remaining Runoff Volume (ft^3)	Total BMP Treatment Volume (ft^3)	Phosphorus Removal Efficiency (%)	Phosphorus Load from Upstream Practices (lb)	Untreated Phosphorus Load to Practice (lb)	Phosphorus Removed By Practice (lb)	Remaining Phosphorus Load (lb)	Downstream Practice to be Employed
6. Bioretention (RR)													
6.a. Bioretention #1 or Micro-Bioretention #1 or Urban Bioretention (Spec #9)	40	0.48	0.20	0	450	675	1,125	25	0.00	0.71	0.39	0.32	

TOTAL IMPERVIOUS COVER TREATED (ac)	0.20	AREA CHECK: OK.
TOTAL MANAGED TURF AREA TREATED (ac)	0.48	AREA CHECK: OK.
TOTAL RUNOFF REDUCTION IN D.A. A (ft^3)	450	

TOTAL PHOSPHORUS AVAILABLE FOR REMOVAL IN D.A. A (lb/yr)	0.71
TOTAL PHOSPHORUS REMOVED WITH RUNOFF REDUCTION PRACTICES IN D.A. A (lb/yr)	0.39
TOTAL PHOSPHORUS REMAINING AFTER APPLYING RUNOFF REDUCTION PRACTICES IN D.A. A (lb/yr)	0.32

MICRO-BIORETENTION "A" DETAILS
(NOT TO SCALE)

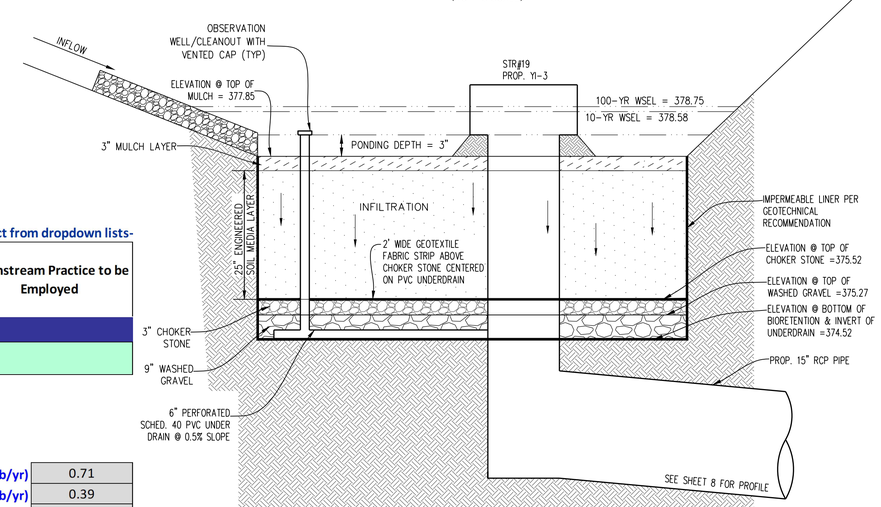

No.	DATE	DESCRIPTION
4	02/19/25	100% PLAN
3	10/18/24	95% REVISION
2	08/02/24	95% PLAN
2	06/25/24	95% DRAFT
1	10/09/18	REVISION PER TOWN OF VIENNA COMMENTS

REVISIONS

PLAN DATE:
02-21-2018
04-18-2018
08-13-2018
10-09-2018
06-25-2024
08-02-2024
10-18-2024
02-19-2025

Urban, Ltd.
7712 Little River Turnpike
Annandale, Virginia 22003
Tel. 703.642.8060
Fax. 703.642.8251
www.urban-ltd.com
Planners · Engineers · Landscape Architects · Land Surveyors

COMMONWEALTH OF VIRGINIA
C. RYAN CONNOR
Lic. No.039531
02/19/2025
PROFESSIONAL ENGINEER

BMP PLAN & DETAILS
ROADWAY AND DRAINAGE IMPROVEMENT PLAN
GLYNDON STREET, N.E.
TOWN OF VIENNA
FAIRFAX COUNTY, VIRGINIA

SCALE: AS SHOWN
C.I. = 2'
DATE: AUG. 2018

SHEET 14 OF 15

FILE No. PP-2156

BMP PRETREATMENT DETAILS

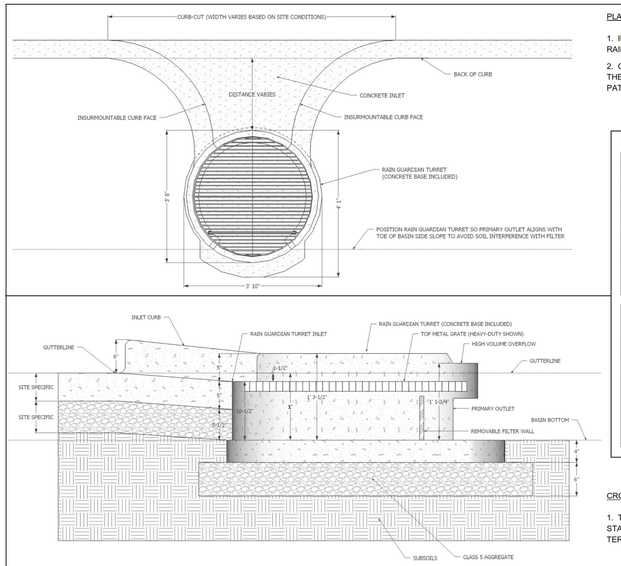

PLAN VIEW NOTES

1. INLET WIDTH AND DISTANCE BETWEEN BACK OF CURB AND RAIN GUARDIAN TURRET MAY VARY WITH SITE CONDITIONS.

2. CONCRETE BASE EXTENDS BEYOND THE FILTER WALL OF THE RAIN GUARDIAN TURRET TO SERVE AS A SPLASH DISSIPATOR.

INSTALLED VIEWS

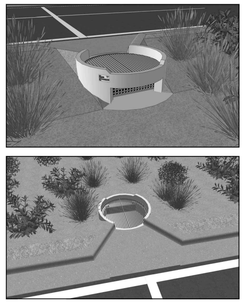

CROSS-SECTION VIEW NOTES

1. THE TOP OF THE CLASS 5 BASE (COMPACTED TO 95% STANDARD PROCTOR) IS PRECISELY 1' 4" BELOW THE GUTTERLINE ELEVATION.

SPECIFICATIONS

1. STEEL REINFORCED, COLD JOINT SECURED MONOLITHIC CONCRETE STRUCTURE (1,030 LBS). CONCRETE SHALL HAVE A MINIMUM COMPRESSIVE STRENGTH OF 4,000 PSI AT 28 DAYS. CONCRETE AIR ENTRAINED (4% TO 8% BY VOLUME). MANUFACTURED AND DESIGNED TO ASTM C858.
2. THREE-POINT PICK USING RECESSED LIFTING POCKETS WITH A STANDARD HOOK.
3. TWO-PIECE LIGHT-DUTY GALVANIZED GRATE (34.5 LBS/PIECE) FOR 541 LB CONCENTRATED LOAD OR 309 LB/SQ FT UNIFORM LOAD.
4. TWO-PIECE HEAVY-DUTY GALVANIZED GRATE (77.5 LBS/PIECE) FOR 2,456 LB CONCENTRATED LOAD OR 1,404 LB/SQ FT UNIFORM LOAD.

INSTALLATION NOTES

1. INSTALL THE CLASS 5 BASE (COMPACTED TO 95% STANDARD PROCTOR). THE DISTANCE FROM THE BACK OF THE CURB MAY VARY BASED ON SITE CONDITIONS, BUT CONSIDERATIONS SHOULD INCLUDE SLOPE OF THE INLET AND BASIN SIDE SLOPES ADJACENT TO THE RAIN GUARDIAN TURRET. POSITION RAIN GUARDIAN TURRET SO PRIMARY OUTLET ALIGNS WITH TOE OF BASIN SIDE SLOPE TO AVOID SOIL INTERFERENCE WITH REMOVABLE FILTER WALL. EXCAVATE 1' 10" BELOW THE GUTTERLINE ELEVATION (I.E. THE BIORETENTION OVERFLOW ELEVATION) TO ACCOMMODATE THE 1' PONDING DEPTH, 6" CLASS 5 AGGREGATE, AND 4" RAIN GUARDIAN TURRET BASE (INCLUDED). THEREFORE, THE TOP OF THE CLASS 5 COMPACTED BASE IS PRECISELY 1' 4" BELOW THE GUTTERLINE ELEVATION. THE TOP OF THE RAIN GUARDIAN TURRET METAL GRATE WILL BE 10-1/2" ABOVE THE TOP OF THE CONCRETE BASE AND 1-1/2" BELOW THE GUTTERLINE ELEVATION TO ACCOMMODATE A SLOPED INLET FROM THE GUTTER TO THE RAIN GUARDIAN TURRET.

2. THE RAIN GUARDIAN TURRET SHOULD BE SET ON THE PREPARED CLASS 5 BASE.

3. INSTALL FRAMING FOR INLET BETWEEN RAIN GUARDIAN TURRET AND BACK OF CURB. TOP ELEVATIONS OF THE FRAMING SHOULD MATCH THE TOP OF THE CURB ON THE STREET SIDE AND THE TOP OF THE RAIN GUARDIAN TURRET ON THE BIORETENTION SIDE.

4. USE EXPANSION JOINT MATERIAL BETWEEN RAIN GUARDIAN TURRET AND BIORETENTION INLET.

5. SIDE CURBS OF THE POURED INLET MUST HAVE AN INSURMOUNTABLE PROFILE TO PREVENT WATER FLOW FROM OVERTOPPING THE DOWNSTREAM SIDE OF THE INLET.

6. REMOVABLE FILTER WALL SHOULD BE INSTALLED WITH FILTER FABRIC FACING THE RAIN GUARDIAN TURRET INLET.

MANUFACTURED BY:
Cretex Concrete Products

RAIN GUARDIAN U.S. PATENT NO. 8,501,016
PRETREATMENT FOR BIORETENTION
Rain Gardens • Swales • Filtration Basins • Infiltration Basins
www.RainGuardian.biz

RAIN GUARDIAN TURRET
PRETREATMENT CHAMBER
BIORETENTION PONDING DEPTH: 1'
TYPICAL DETAIL

REVISION HISTORY

REV	BY	DATE	DESCRIPTION
A	MDH	12/1/15	TURRET—1'
SCALE		VARIABLE	
U.S. PATENT		8,501,016	

ANOKA CONSERVATION DISTRICT
Anoka Conservation District
1318 McKay Dr. NE, Suite 300
Ham Lake, MN 55304
763-434-2030

SCUPPER DETAIL

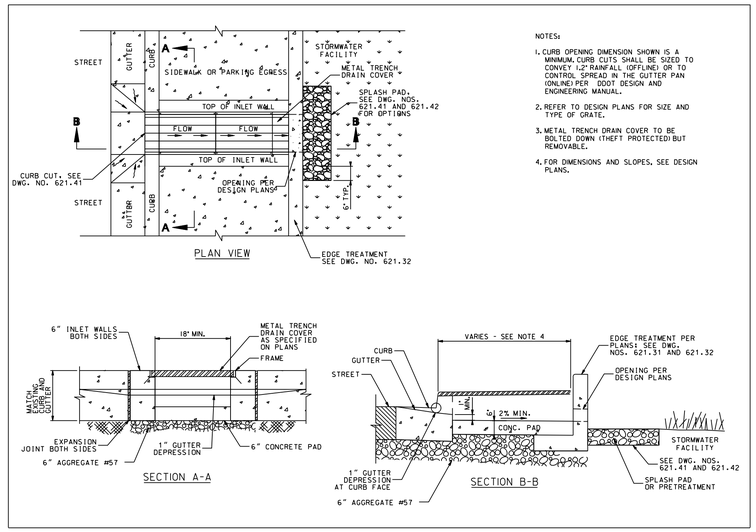

NOTES:

1. CURB OPENING DIMENSION SHOWN IS A MINIMUM. CURB CUTS SHALL BE SIZED TO CONVEY 1.2" RAINFALL (OFFLINE) OR TO CONTROL SPREAD IN THE GUTTER PAN (ONLINE) PER DDOT DESIGN AND ENGINEERING MANUAL.
2. REFER TO DESIGN PLANS FOR SIZE AND TYPE OF GRATE.
3. METAL TRENCH DRAIN COVER TO BE BOLTED DOWN (THEFT PROTECTED) BUT REMOVABLE.
4. FOR DIMENSIONS AND SLOPES, SEE DESIGN PLANS.

COVER NOTE:

THE METAL TRENCH DRAIN COVER AS DEPICTED ABOVE SHALL BE CONSTRUCTED FROM SLIP RESISTANT DIAMOND PLATE OR AN EQUIVALENT MATERIAL. THE COVER MUST BE SUFFICIENTLY THICK TO WITHSTAND ANTICIPATED TRAFFIC LOADS.

SCUPPER SIZING COMPUTATIONS

10-YR DISCHARGE (Q) = 1.72 CFS
MANNING'S ROUGHNESS COEFFICIENT (n) = 0.013
SLOPE (S) = 2%
WIDTH (W) = 24"
USING MANNING'S EQUATION,
FLOW DEPTH (D) = 0.18'
FLOW VELOCITY (V) = 4.67 FT/S

BIORETENTION MATERIAL SPECIFICATIONS

VA DEQ SPEC. 9, DRAFT VERSION 2.0, JANUARY 1, 2013

Table 9.7. Bioretention Material Specifications

Material	Specification	Notes
Filter Media Composition	Filter Media to contain: • 80% - 90% sand • 10%-20% soil fines • 3%-5% organic matter	The volume of filter media based on 110% of the plan volume, to account for settling or compaction.
Filter Media Testing	Available P between L+ and M per DCR 2005 Nutrient Management Criteria.	The media should be certified by the supplier.
Mulch Layer	Use aged, shredded hardwood bark mulch or stable coarse compost.	Lay a 2 to 3 inch layer on the surface of the filter bed.
Alternative Surface Cover	Use river stone or pea gravel, coir and jute matting, or turf cover.	Lay a 2 to 3 inch layer of to suppress weed growth.
Top Soil For Turf Cover	Loamy sand or sandy loam texture, with less than 5% clay content, pH corrected to between 6 and 7, and an organic matter content of at least 2%.	3 inch surface depth.
Geotextile/Liner	Use a non-woven geotextile fabric with a flow rate of > 110 gal./min./sq. ft. (e.g., Geotex 351 or equivalent)	Apply only to the sides and directly above the underdrain. For hotspots and certain karst sites only, use an appropriate liner on bottom.
Choking Layer	Lay a 2 to 4 inch layer of sand over a 2 inch layer of choker stone (typically #8 or #89 washed gravel), which is laid over the underdrain stone.	
Stone Jacket for Underdrain and/or Storage Layer	1 inch stone should be double-washed and clean and free of all fines (e.g., VDOT #57 stone).	12 inches for the underdrain; 12 to 18 inches for the stone storage layer, if needed
Underdrains, Cleanouts, and Observation Wells	Use 6 inch rigid schedule 40 PVC pipe (or equivalent corrugated HDPE for micro-bioretention), with 3/8-inch perforations at 6 inches on center; position each underdrain on a 1% or 2% slope located nor more than 20 feet from the next pipe.	Lay the perforated pipe under the length of the bioretention cell, and install non-perforated pipe as needed to connect with the storm drain system. Install T's and Y's as needed, depending on the underdrain configuration. Extend cleanout pipes to the surface with vented caps at the Ts and Ys.
Plant Materials	Plant one tree per 250 square feet (15 feet on-center, minimum 1 inch caliper). Shrubs a minimum of 30 inches high planted a minimum of 10 feet on-center. Plant ground cover plugs at 12 to 18 inches on-center; Plant container-grown plants at 18 to 24 inches on-center, depending on the initial plant size and how large it will grow.	Establish plant materials as specified in the landscaping plan and the recommended plant list. In general, plant spacing must be sufficient to ensure the plant material achieves 80% cover in the proposed planting areas within a 3-year period. If seed mixes are used, they should be from a qualified supplier, should be appropriate for stormwater basin applications, and should consist of native species (unless the seeding is to establish maintained turf).

MAINTENANCE ACTIVITIES AND SCHEDULE

BIORETENTION FILTER (VA DEQ SPEC. 9, DRAFT VERSION 2.0, JANUARY 1, 2013)

Table 9.8. Suggested Annual Maintenance Activities for Bioretention

Maintenance Tasks	Frequency
• Mowing of grass filter strips and bioretention turf cover	At least 4 times a year
• Spot weeding, erosion repair, trash removal, and mulch raking	Twice during growing season
• Add reinforcement planting to maintain desired the vegetation density • Remove invasive plants using recommended control methods • Stabilize the contributing drainage area to prevent erosion	As needed
• Spring inspection and cleanup • Supplement mulch to maintain a 3 inch layer • Prune trees and shrubs	Annually
• Remove sediment in pre-treatment cells and inflow points	Once every 2 to 3 years
• Replace the mulch layer	Every 3 years

BIORETENTION FILTER NOTES:

1. THE CONTRACTOR SHALL COMPLY WITH ALL BMP SPECIFICATIONS OUTLINED IN THE VIRGINIA DEQ STORMWATER DESIGN SPECIFICATION NO. 9, DRAFT VERSION 2.0, PUBLISHED JANUARY 1, 2013.
2. THE CONTRACTOR SHALL FOLLOW THE BMP CONSTRUCTION SEQUENCE SPECIFIED IN VA DEQ SPEC. NO. 9, DRAFT VERSION 2.0, SECTION 8 (PAGES 37–39).
3. A SOIL SCIENTIST CERTIFICATION SHALL BE PROVIDED BY CONTRACTOR WHICH CERTIFIES TO THE CONTENT AND PERFORMANCE OF THE SOIL MEDIA PER VA DEQ SPEC. NO. 9, DRAFT VERSION 2.0, SECTION 6.6 (PAGES 24–29).
4. UPON INSTALLATION, A SOIL SCIENTIST CERTIFICATION SHALL BE PROVIDED BY THE CONTRACTOR WHICH CERTIFIES TO THE COMPACTION AND OTHER INSTALLATION FACTORS THAT AFFECT THE SOIL MEDIA PERFORMANCE AS OUTLINED IN VA DEQ SPEC. NO 9, DRAFT VERSION 2.0.
5. TO ENSURE PROPER FUNCTIONALITY AND EXTEND THE LONGEVITY OF THE BMP DEVICES, THE BMP DEVICES SHALL BE REGULARLY MAINTAINED PER THE MAINTENANCE SCHEDULES LISTED BELOW. THE OWNER SHALL BE RESPONSIBLE FOR ALL MAINTENANCE ACTIVITIES.
6. THE BIORETENTION MATERIAL SPECIFICATIONS (TABLE 9.7) BELOW SHALL BE USED FOR INFORMATION ONLY FOR THE MATERIALS TO BE UTILIZED IN THE CONSTRUCTION OF THE BIORETENTION FILTER. THE CONTRACTOR SHALL ACTUALLY INSTALL ONLY THE MATERIALS CALLED OUT ON THIS PLAN (WHERE PROVIDED) OR OTHERWISE AS INDICATED IN THE VA DEQ SPEC. NO. 9. THE CONTRACTOR SHALL ALSO PROCURE ALL BMP MATERIALS FROM A CERTIFIED MANUFACTURER. SEE PLANTING PLAN FOR PLANTING MATERIALS.

RIPRAP PROTECTION COMPUTATIONS

OUTLET PROTECTION - MINIMUM DIMENSIONS

STR. #	TAILWATER CONDITION	PIPE SPAN (Do)	DISCHARGE (Q_{10})	VELOCITY (V_{10})	APRON LENGTH (La)	APRON WIDTH UPSTREAM (3Do)	APRON WIDTH DOWNSTREAM (W)	VDOT CLASS	D50	RIP RAP THICKNESS FEET
		INCHES	CFS	FPS	FEET	FEET	FEET		FEET	
A	1	24	1.72	4.67	6	6	12	I	1.1	2.5

COMPUTATIONS PER FSM 5.220 & VESCH STANDARD 3.18

1 MINIMUM TAILWATER CONDTITION (Tw < 0.5 DIAMETER)

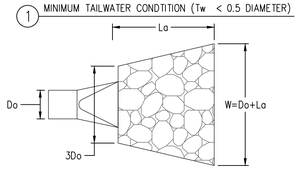

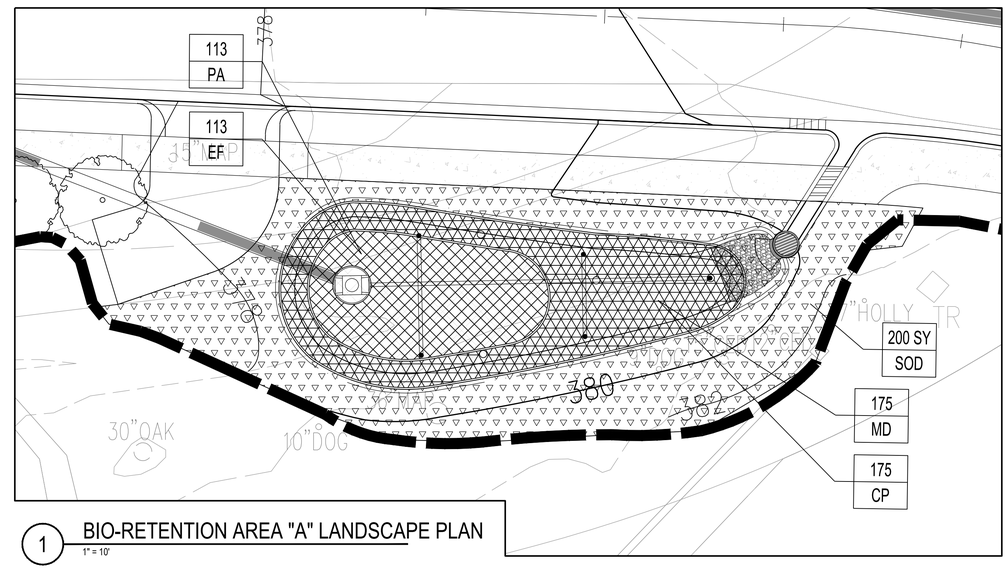

1 BIO-RETENTION AREA "A" LANDSCAPE PLAN
1" = 10'

LEGEND
PERENNIALS
SOD

BIORETENTION AREA PLANT LIST

BIORETENTION PLANTING TEMPLATE: HERBACEOUS MEADOW

Qty.	Key	Botanical Name	Common Name	Size	Type	Remarks
		Perennials				Plant perennials in random pattern, interspersed with each other in areas shown on plan
175	CP	Carex pensylvanica	Pennsylvania Sedge	2 qt.	Cont.	18" o.c.; Mature height 0.5-1'
113	EF	Eupatorium dubium 'Baby Joe'	Baby Joe Dwarf Joe Pye Weed	2 qt.	Cont.	Purple-pink flowers; 18" o.c.; Mature height 2-3'
175	MD	Mornarda didyma 'Fireball'	Fireball Bee Balm	2 qt.	Cont.	Red flowers, spring; 18" o.c.; Mature height 1-2'
113	PA	Panicum virgatum 'Cape Breeze'	Cape Breeze Switchgrass	2 qt.	Cont.	18" o.c.; Mature height 2-3'
		Sod				
200 SY	SOD	Grass Sod	Tall Fescue/Kentucky Blue Grass Blend			

Note: Dwarf cultivars have been chosen to minimize height and avoid visibility issues at the intersections.

COMMONWEALTH OF VIRGINIA
John Lighte
Lic. No. 1957
08/01/2024
LANDSCAPE ARCHITECT

No.	DATE	DESCRIPTION
4	02/19/25	100% PLAN
3	10/18/24	95% REVISION
2	08/02/24	95% PLAN
2	06/25/24	95% DRAFT
1	10/09/18	REVISION PER TOWN OF VIENNA COMMENTS

REVISIONS

PLAN DATE:
02-21-2018
04-18-2018
08-13-2018
10-09-2018
06-25-2024
08-02-2024
10-18-2024
02-19-2025

urban
Planners · Engineers · Landscape Architects · Land Surveyors
Urban, Ltd.
7712 Little River Turnpike
Annandale, Virginia 22003
Tel. 703.642.8080
Fax. 703.642.8251
www.urban-ltd.com

COMMONWEALTH OF VIRGINIA
C. RYAN CONNOR
Lic. No.039531
02/19/2025
PROFESSIONAL ENGINEER

BMP NOTES & DETAILS AND LANDSCAPE PLAN
ROADWAY AND DRAINAGE IMPROVEMENT PLAN
GLYNDON STREET, N.E.
TOWN OF VIENNA
FAIRFAX COUNTY, VIRGINIA

SCALE: AS SHOWN
C.I. = 2'
DATE: AUG. 2018

SHEET 15 OF 15

FILE No.
PP-2156